LA-UR-02-1673

Approved for public release;
distribution is unlimited.

Title: Radioactive Liquid Waste Treatment Facility Plant Test Conducted April 2001

Author(s): J. Christian Del Signore

Submitted to: Facilities and Waste Operations Division

LA-UR-02-1673
March 2002

Radioactive Liquid Waste Treatment Facility

Plant Test Conducted April 2001

J. Christian Del Signore

Radioactive Liquid Waste Treatment Facility
Plant Test

Conducted April 2001

Abstract

A two-day test was conducted during April 2001 at the Radioactive Liquid Waste Treatment Facility at the Los Alamos National Laboratory. The tests represented the second set of comprehensive chemical and radiological data for plant operations since major process modifications were made in 1999. The test was similar to a plant test conducted in May 2000. The test required the preparation of a 40,000-gallon batch of influent waste water, the collection and analysis of 400 samples for as many as 25 different parameters each, advance coordination with four analytical laboratories, and the compilation and summarization of a large amount of data. Two major and several lesser conclusions were drawn from the test. The test showed that two feed preparation steps, oxidation using potassium permanganate and aging for seven days reduced gross alpha and gross beta concentrations by factors of 52 and 72, respectively, before the influent was even fed to the first treatment unit. The test also revealed that about 4,000 gallons per day of unexplained water entered the treatment process; subsequent investigations have failed to identify the sources of this water. Analytical results revealed that nearly all water impurities are affected in one of two manners.

Contents

Abstract v
Acronyms and Abbreviations xi
Water Quality Parameters xii

1.0 Background, Purpose, and Scope 1

2.0 Sampling Points and Parameters 3

2.1 Sampling Points 3
2.2 Parameters 3
2.3 Sampling Plan 4

3.0 Preparations 5

3.1 Batch Feed 5
3.2 Feed Preparation 7
3.3 Batch Processing 7
3.4 Sampling Preparations 7
3.5 Laboratory Arrangements 8

4.0 Plant Conditions 9

4.1 General 9
4.2 Batch Feed 9
4.3 Clarifier 9
4.4 Gravity Filter 10
4.5 RP Filter 10
4.6 Tubular Ultrafilter 10
4.7 Reverse Osmosis 10
4.8 Storage Tanks 10
4.9 Field Records 11

5.0 Flows 13

5.1 Methods Used to Estimate Flows For Each Unit Operation 13
5.2 Unit Operation Flow Summary 14
5.3 MTP Water Balance 14
5.4 Flow Summary 15

6.0 Sample Results 20

6.1 Presentation of Sample Results 20

6.2 Conventional Parameters 22
6.3 Metals of Concern 22
6.4 Other Metals 23
6.5 Anions 23
6.6 Radioactive Parameters 23
6.7 Influent Quality 24

7.0 Material Balances 45

8.0 Conclusions 47

8.1 Preoxidation and Aging 47
8.2 Mystery Waters 47
8.3 Water Inventory 48
8.4 Radioactivity Reduction 48
8.5 Isotope Chemistry 49
8.6 Treatment Synopsis 49

9.0 Recommendations 51

10.0 References 53

Appendix A - Flows A-1

List of Figures

5-1 Average Flow Rates for the Clarifier, Gravity Filter, and RP Filter on 04/25/01 15
5-2 Average Flow Rates for the Tubular Ultrafilter on 04/25/01 16
5-3 Average Flow Rates for Reverse Osmosis on 04/25/01 16
5-4 Flows (Total) on 04/25/01 .....
5-5 One-Day Overall Water Balance (04/25/01) .....
5-6 Two-Day Overall Water Balance (04/24 & 04/25) .....

6-1 pH Concentrations 24
6-2 Total Alkalinity 24
6-3 Chemical Oxygen Demand 25
6-4 Total Suspended Solids 25
6-5 Total Dissolved Solids 26
6-6 Ammonia 26
6-7 Arsenic and Copper 27
6-8 Iron, Magnesium, and Manganese 27
6-9 Calcium and Silicon 28
6-10 Mercury 28
6-11 Potassium and Sodium 29

6-12 Aluminum, Nickel, and Zinc 29
6-13 Boron, Molybdenum, Tin, and Strontium 30
6-14 Barium and Beryllium 30
6-15 Selenium, Titanium, and Vanadium 31
6-16 Lithium and Silver 31
6-17 Chloride and Sulfate 32
6-18 Fluoride and Perchlorate 32
6-19 Nitrate Concentrations 33
6-20 Gross Alpha 33
6-21 Gross Beta 34
6-22 Tritium Concentrations 34

List of Tables

2-1 Unit Operations and Sampling Points For Plant Test 2001 3
2-2 Sampling Points and Analyses For Plant Test 2001 3
3-1 Estimated Rad Composition in the Feed Batch for Plant Test 2001 6
3-2 MTP Water Inventories 6
3-3 Analytical Laboratories Supporting the Plant Test 6
4-1 Field Data Recorded at Each Sampling Time Step, 04/25/01 9
5-1 Unit Operations Flow Summary for 04/25/01 .....

6-1 Sample Results – Conventional Parameters 17
6-2 Sample Results – Metals of Concern 18
6-3 Sample Results – Other Metals 18
6-4 Sample Results – Anions 19
6-5 Sample Results – Radioactive Parameters 20
6-6 Decontamination Factors – Conventional Parameters 20
6-7 Decontamination Factors – Metals of Concern 21
6-8 Decontamination Factors – Other Metals 22
6-9 Decontamination Factors – Anions 23
6-10 Decontamination Factors – Radioactive Parameters .....
6-11 Alpha Speciation Results (Rad) .....
6-12 Alpha Speciation Results (Chemical) .....

Acronyms and Abbreviations

C_i	curies
CLI	clarifier influent (sampling point)
CLE	clarifier effluent (sampling point)
d	day
DCG	derived concentration guideline
DF	decontamination factor
DOE	U.S. Department of Energy
EDR	electrodialysis reversal
EPA	U.S. Environmental Protection Agency
g	grams
gal	gallon
gpd	gallons per day
gpm	gallons per minute
h	hour
L	liter
LANL	Los Alamos National Laboratory
lph	liters per hour
lpm	liters per minute
mg	milligram
µg	microgram
nC_i	nanocurie
NMED	New Mexico Environment Department
pC_i	picocurie
RLW	radioactive liquid waste
RLWTF	Radioactive Liquid Waste Treatment Facility
RO	reverse osmosis
ROC	RO concentrate (sampling point)
ROF	RO feed (sampling point)
ROP	RO permeate (sampling point)
TK	tank
TUF	tubular ultrafilter
TFE	TUF effluent or permeate (sampling point)
TFI	TUF influent from TK-71 (sampling point)
TFR	TUF recycle from TK-72 (sampling point)
yr	year

Water Quality Parameters

Anions:

Cl	chloride
ClO_4	perchlorate
F	fluoride
NO_3	nitrate
NO_3-N	nitrogen existing as nitrate
PO_4	phosphate
SO_4	sulfate

Conventional:

NH_3-N	nitrogen existing as ammonia
COD	chemical oxygen demand
$RxSiO_2$	reactive silica
SiO_2	silica
TALK	total alkalinity
TDS	total dissolved solids
TOC	total organic carbon
TSS	total suspended solids

Metals:

Ag	silver	Li	lithium
Al	aluminum	Mg	magnesium
As	arsenic	Mn	manganese
B	boron	Mo	molybdenum
Ba	barium	Na	sodium
Be	beryllium	Ni	nickel
Ca	calcium	Pb	lead
Cd	cadmium	Se	selenium
Co	cobalt	Si	silicon
Cr	chromium	Sn	tin
Cu	copper	Sr	strontium
Fe	iron	Ti	titanium
Hg	mercury	V	vanadium
K	potassium	Zn	zinc

1.0 Background, Purpose, and Scope

A controlled test of RLWTF Main Treatment Plant (MTP) was conducted in May 2000 (Del Signore et al, August 2000). The test yielded the first-ever comprehensive set of data about plant flows and treatment performance, and provided critical input to the Secondary Stream Study (Del Signore et al, September 2000). Three significant recommendations from the Secondary Stream Study were implemented following publication of that report. They were (a) to routinely sample tubular ultrafilter (TUF) to determine if TUF permeate meets discharge standards, (b) to operate the reverse osmosis (RO) unit at higher recovery rates, and (c) , to use gravity filter effluent to dissolve chemicals, principally lime and ferric sulfate, that are added at the clarifier. (This latter process modification, in fact, eliminated six gallons per minute of industrial water usage, and led to pollution prevention awards during 2001 from LANL and DOE Headquarters.) Overall, these process changes wrought significant improvements.

The plant test of May 2000, however, provided but a single set of comprehensive process data. Discussions had already begun about repeating the test when the plant received a slug of influent in late March 2001 with extremely high radioactive content. The slug had a gross alpha activity of 1100 nanocuries per liter, about 10 times higher than normally encountered. This slug of highly radioactive influent was used a second plant test, which was conducted in late April 2001. (For ease of discussion, these two tests are referred to as Plant Test 2000 and Plant Test 2001.)

Plant Test 2001 was structured much like Plant Test 2000. A batch of feed was prepared and then fed through the MTP over a two-day period. The first day was used to flush the process line, and sampling was conducted on the second day. Samples were collected at timed intervals from nine different process streams, and analyzed for conventional parameters, metals, anions, and radioactivity. Flows and sample results were then analyzed to learn more about the performance of the individual unit operations and the treatment plant overall. There were only two significant differences between the tests. First, the gross alpha radioactivity levels in Plant Test 2001 were about 20 times higher than in Plant Test 2000. This was exciting because it would present a bounding test for the MTP. Secondly, the influent batch for Plant Test 2001 was pre-oxidized with potassium permanganate and then aged, whereas the batch prepared for Plant Test 2000 was not.

This report documents the unit operations and process steps employed at the RLWTF during the plant test of 24 and 25 April 2001. It also documents operating conditions and sampling activities during the two-day test, and presents and discusses the analytical data obtained. Conclusions drawn from the data are presented, and will hopefully provide the necessary basis for future operations and process recommendations.

2.0 Sampling Points and Parameters

2.1 Sampling Points: Nine sample points were selected to provide process data, as shown in Table 2-1. These were the same nine sampling points selected for the plant test of May 2000.

Table 2-1
Unit Operations and Sampling Points For Plant Test 2001

Unit Operation	In	Out	Other
Clarifier/ Gravity Filter	CLI	RPI	CLE
RP Filter	RPI	TFI	---
Tubular Ultrafilter	TFI	TFP	TFR
Reverse Osmosis	ROF	ROP	ROC

CLI / CLE: clarifier influent / effluent
RPI: influent to the RP filter
TFI / TFP / TFR: tubular ultrafilter makeup / permeate / recycle
ROF / ROP / ROC: reverse osmosis feed / permeate / concentrate

TFI was a sample of liquids withdrawn from TK-71. The RP filter discharges into TK-71, and TK-71 provides makeup water to the TUF. Similarly, TFR was a sample of the TUF concentrate stream, which joins with the TFI stream on the suction side of the high-pressure pump to provide feed to the TUF.

2.2 Parameters: Four categories of parameters were tracked; the total list appears in Table 2-2 below.

- Conventional water-quality parameters included total dissolved solids (TDS), total suspended solids (TSS), and eight other parameters typically of concern at waste water treatment plants. Conductivity and ammonia, added for Plant Test 2001, were parameters not evaluated in Plant Test 2000. Total Kjedahl nitrogen was deleted from last year's list.

- Samples were analyzed for a total of 28 metals. These are placed into two categories – metals of concern (14), and other metals (14). Concerns are either process or regulatory. For example, calcium from lime is responsible for 90% of the sludge that is generated in the clarifier, and causes plugging in pipes and in the evaporator heat exchanger. Silica and calcium can both plug pores of the TUF and RO membranes. Silica also causes plugging at the interim evaporator heat exganger. Metals of regulatory concern include those for which NPDES discharge standards are quite low. Mercury provides an example of a parameter not present in high concentrations, but of regulatory concern. It's NPDES discharge standard was reduced effective 02/01/01 by a factor of 13 to 0.77 μg/L. This very stringent standard merited close tracking of mercury during Plant Test 2001.

- Six anions were tracked, two more than in Plant Test 2000: chloride, fluoride (new), sulfate, nitrate, perchlorate, and phosphate (new). Fluoride was added because of its NMED groundwater discharge standard of 1.6 mg/L; phosphate was added because the nitrate analytical procedure simultaneously yields phosphate results.

- Radioactive parameters consisted of gross alpha, gross beta, and tritium for all sampling locations. One alpha spectroscopy analysis was also performed for each of the nine sampling points. A composite was made from the five time-step samples collected at each sample point, and alpha spectroscopy was performed on the composite sample. Samples were not analyzed for gross gamma.

2.3 Sampling Plan: A one-liter sample was collected at each of the nine sampling points at approximately 90-minute intervals. Five sets of samples were collected over a six-hour period. This was a reduction from the sampling conducted during Plant Test 2000, when nine sample sets were collected over an eight-hour period with 60-minute intervals between sampling events. The reduction was selected because the smaller volume of influent available for this test.

As with Plant Test 2000, samples were not analyzed for all parameters at every process point. For example, metal and anion concentrations are typically unchanged between the gravity filter and the RO unit (a) since those not removed by the clarifier and gravity filter are present primarily as dissolved solids and (b) since neither the RP filter nor the TUF can remove dissolved solids. Table 2-2 summarizes the agreed-upon sample analyses.

Table 2-2
Sampling Points and Analyses Plant For Test 2001

Parameter Type	No.	Parameters	Sample Points
Conventional	4	pH, Conductivity, TSS, COD	All nine
Conventional	5	TDS, $RxSiO_2$, TALK, PALK, NH_3-N	CLI, RPI, ROF, ROC, ROP
Metals of concern	14	As,Ca,Cd,Co,Cr,Cu,Fe,Hg,K,Mg,Mn,Na,Pb,Si	CLI, RPI, ROF, ROC, ROP
Other Metals	14	Ag,Al,B,Ba,Be,Li,Mo,Ni,Se,Sn,Sr,Ti,V,Zn	CLI, RPI, ROF, ROC, ROP
Anions	6	Cl, ClO_4, F, NO3-N, PO_4-P, SO_4	CLI, RPI, ROF, ROC, ROP
Radioactive	3	Tritium, Gross α, Gross β	All nine
Radioactive	--	Alpha spectroscopy	One composite at all nine

3.0 Preparations

3.1 Batch Feed

High-Radioactivity Influent: RLWTF influent typically has concentrations ranging from 50-150 nC_i/L gross alpha. However, a slug of influent with a concentration of nearly 1100 nC_i/L gross alpha was received on 29 and 30 March 2001. Rightfully concerned about the plant's ability to process influent with an order of magnitude more radioactivity than normal, plant personnel were successful in side-streaming about 19,000 gallons of this influent. Discussions about how to treat these waters led to the idea of processing it through the RLWTF as a batch. MTP unit operations would be sampled as was done during the plant test of May 2000 to acquire a supplemental set of performance data. One large and exciting difference, however, was the radioactive concentration. Plant Test 2000 used influent with a low gross alpha concentration of 33 nC_i/L. The side-streamed influent would provide a test at the other extreme, and would thus provide complementary, as well as supplemental, data about plant performance.

Batch Size: The MTP has a holding capacity for in-process liquids of 63,000 gallons (Table 3-2). The clarifier holds about 28,000 gallons of influent; the gravity filter holds nearly 5,000 gallons; and there are three in-process surge tanks (TK-71, TK-72, TK-9) with capacities of 10,000 gallons each. A valid plant test requires that the batch of test waters be of sufficient size to replace these in-process waters. For example, Plant Test 2000 was conducted with a 50,000-gallon batch of influent fed over two days. The first day, 05/01/00, was used to flush water through the MTP; sampling was conducted on the second day of the test.

The 19,000 gallons of high-radioactivity influent was too small to flush the MTP; it would simply have been consumed by the first piece of equipment, and mixed with in-process waters. On the other hand, diluting it to create another 50,000-gallon test batch of influent would have meant reducing the gross alpha concentration by a factor of 2.5, and would thus have reduced the challenge of treating waters with high levels of radioactivity. The dilemma was resolved by creating a slightly smaller 40,000-gallon batch of test influent. To prevent this smaller batch from being swallowed in the MTP, the inventory of in-process waters was reduced from 57,000 to just 30,000 gallons prior to the start of the test. Table 3-2 provides details of this inventory reduction.

Batch Composition: The 100,000-gallon tank already contained some water when the high-radioactivity influent was side-streamed on 29 and 30 March 2001. Other influent was then added to the tank to create the 40,000-gallon test batch. Since the 100,000-gallon tank cannot be sampled, the radioactivity of this batch had to be estimated. As shown in Table 3-1, gross alpha concentration was estimated to be 482 nCi/L, or approximately 15 times higher than the gross alpha concentration in Plant Test 2000. It was planned to verify this estimate by sampling clarifier influent during the plant test, but that strategy was foiled by the success of pre-oxidation and aging as discussed below. As a result, estimated starting concentrations were the only available data for the feed batch.

Table 3-1
Estimated Rad Composition in the Feed Batch
For Plant Test 2001

Component	Volume Added (gal)	Total Volume (gal)	Gross α (nCi/L)	Gross β (nCi/L)	Tritium (nCi/L)	Rad Basis
Pre-March	4,000	4,000	5.4	2.1	3.6	Feb. RDF Composite, # 1.72202 (a)
Early March	3,200	7,200	8.0	1.7	3.6	RDF for 03/02, Sample # 1.74131
March 30, High α	18,600	25,800	1,067	210	17.2	Sample # 1.75038 (b,c)
April Adjustment	(1,500)	24,300	771	152	13.4	Above mixture
April 18	2,900	27,200	41	5.9	9.4	RDF for 04/18, Sample # 1.74227 (d)
April 20	13,000	40,200	40	0.9	10.0	RDF for 04/20, Sample # 1.74236 (d)
Batch	40,200		482	93	12.0	

(a) Tritium not analyzed; stated value is an estimate.
(b) Sum of Pu-238, Pu-239, Am-241. Not gross alpha.
(c) Tritium (350 initially) was re-analyzed by distillation method.
(d) Tritium value is effluent value for the following operations day.

Table 3-2
MTP Water Inventories

Unit	Capacity	04/24 08:00	04/24 Purge	04/24 Test Start	04/24 16:00	04/25 16:00	Purge
Clarifier	28,000	28,000	5,600	22,400	28,000	28,000	Sludge, sent to Sludge Tank
Gravity Filter	4,800	4,800	0	4,800	4,800	4,800	---
TK-71	10,000	7,600	5,800	1,800	5,800	5,900	10,500 gal. From TK-71,72 sent to 75K tank
TK-72	10,000	9,900	9,300	600	7,800	7,700	Remaining 4700 gal sent to ??
TK-09	10,000	6,600	6,400	200	300	6,100	Assume this went to Frac Tank
	62,800	56,900	27,100	29,800	46,700	52,500	

3.2 Feed Preparation: Because of the high radioactivity of this special batch of influent, it was decided to implement two additional recommendations from the Secondary Stream Study. That study pointed out that RLWTF performance would be enhanced if influent were oxidized and aged prior to being fed to the clarifier. Accordingly, 25 pounds of potassium permanganate, equivalent to 75 mg/L, were added to pre-oxidize the 40,000-gallon batch of influent. This was performed on Wednesday, 04/18/01, which allowed the now-oxidized batch to age for seven days before being sampled on Wednesday, 04/25/01.

3.3 Batch Processing: The homogenous batch of feed eliminated one large test variable, influent concentration, thus reducing scatter and uncertainty in test data. To further reduce scatter and uncertainty, the addition of other waters during the plant was also minimized. These strategies were achieved by taking the following steps:

- The test batch was pumped to the 17K tank, and fed to the clarifier from there. New influent received during the two-day plant test was side-streamed to the 75,000-gallon tank instead of being processed through the MTP.

- In-process storage vessels TK-71, TK-72, TK-9 were nearly emptied prior to the start of the test, and were partially emptied prior to the start of sampling. This action reduced mixing of the special batch with in-process waters. Before the first, or flush, day of the test, in-process waters from TK-71 (5700 gallons) and TK-72 (9400 gallons) were transferred to the 75K tank. Another 6000 gallons were removed from TK-9 by transfer to the effluent tanks.

- Approximately 5600 gallons of sludge were withdrawn from the clarifier prior to the start of the test.

- The EDR was not operated. This eliminated the recycle of about 3000 gallons of EDR product to the MTP.

These activities reduced the volume of in-process waters from about 57,000 gallons to about 30,000 gallons (Table 3-2), and minimized recycle streams during the test. Both actions contributed to constant feed conditions during Plant Test 2001.

3.4 Sampling Preparations: The large number of samples (nine sampling points, five sampling events), and the larger number of analyses, required forethought. Three RLW personnel were used for the sampling effort. Samplers were R.L. McClenahan (clarifier influent, clarifier effluent, and RP filter influent) and J.C. Del Signore (the six membrane sampling points). The sample coordinator, V.P. Worland, split the one-liter samples into five smaller samples and added preservative to some of these sub-samples. The coordinator also analyzed each of the 45 samples for pH and conductivity.

The sample splitting and preparation procedure was as follows:

- For metal analyses, including mercury, a 50-ml sub-sample was created. Nitric acid was added (pH<2) as a preservative.

- For COD and NH_3-N analyses, a 50-ml sub-sample was created. Sulfuric acid was added (pH<2) as a preservative.

- For tritium, gross alpha, and gross beta analyses, a 100-ml sub-sample was created. No preservative was required.

- Another 100-ml sub-sample was set-aside for the creation of composite samples for alpha spectroscopy. One composite was created for each of the nine sampling points; preservative was not required.

- The remaining sample volume, ~700 milliliters, was used for the analyses for anions and the remaining conventional parameters.

All of these sampling details were delineated in advance of the sampling itself, including the preparation of pre-printed sample labels, the collection of sufficient sample vials, and the pre-application of labels to vials.

3.5 Laboratory Arrangements: Advance discussions were held with analytical chemists to discuss details such as sample size and preservative, and to spread the analytical workload to minimize the lapse of time between sampling and receipt of analytical results. The Analytical Chemistry Sciences Group of the chemistry Division (C-ACS) performed analyses for metals using inductively-coupled plasma (ICP) emission spectroscopy, for mercury using atomic absorption spectroscopy, and for some of the conventional parameters (reactive silica, alkalinity, and NH_3-N). RLW personnel performed analyses for radioactivity, for anions, and for the remainder of the conventional parameters. The roles of laboratories and chemists are shown in Table 3-3.

Table 3-3
Analytical Laboratories Supporting Plant Test 2001

Category	Parameters	Group	Chemist
Conventional	pH, Conductivity	RLW	Worland
Conventional	TSS, TDS, COD	RLW	Bisset
Conventional	NH_3-N, PALK, TALK, $RxSiO_2$	C-ACS	Straw
Metals	27 via ICP	C-ACS	Kozubal
Metals	Hg via AAS	C-ACS	Kozubal
Anions	Cl, ClO_4, F, NO_3-N, PO_4-P, SO_4	RLW	Hodge
Radioactive	Tritium, Gross α, Gross β	RLW	Bisset
Radioactive	Alpha spectroscopy	RLW	Bisset

4.0 Plant Conditions

4.1 General: The test was conducted Tuesday, 04/24/01, and Wednesday, 04/25/01. Tuesday was used to flush water through the MTP. Sampling was conducted on Wednesday, with the exception of the fifth and final set of samples from the membrane process units, which was collected on Thursday, 04/26/01, within the first 90 minutes of plant operation. Table 4-1 summarizes operations.

Table 4-1
MTP Operations During Plant Test 2001

Operation	Tuesday 04/24	Wednesday 04/25	Thursday 04/26
Clarifier [a]	1020-1550 (330 min.)	1025-1715 (410 min.)	1450-1720 (150 min.) [b]
TUF	1115-1205 (50 min.) [b]	0815-1000 (105 min.) [b] 1140-1715 (335 min.)	1430-1700 (150 min.)
RO	Did not operate	1140-1715 (335 min.) [c]	1440-1650 (130 min.)

a: Clarifier, gravity filter, and RP filter operated at the same times.
b: Waters treated were not from the special test batch.
c: Mixture of special batch and other waters.

4.2 Batch Feed: A batch of influent was created and pre-treated in advance of the test, and then fed to the plant during both days of the test, as discussed in Sections 3.1 and 3.2 above. This condition is not typical of plant operations, but was deemed essential in order to eliminate a significant test variable and reduce data scatter and uncertainty. Also atypical, the electrodialysis reversal (EDR) unit was not operated, in order to eliminate another feed variable, recycled EDR product. (The EDR treats concentrate from the reverse osmosis unit. Product from the EDR is then recycled back to the MTP influent tank system. Had the EDR product been recycled, feed would not have been homogenous during the test.)

4.3 Clarifier: Totals of 19,300 gallons and 20,900 gallons of the test batch of influent were fed to the clarifier on 04/24 and 04/25, respectively. Chemical additives were lime and ferric sulfate; caustic soda was not used. Gravity filter effluent was used to dissolve the ferric and lime. All of these were standard plant operating protocol. (The use of gravity filter effluent, instituted in January 2001, stems from a recommendation of the Secondary Stream Study. It eliminates the treatment of about 2500 gallons per day of water, and led to two pollution prevention awards for the RLWTF.)

Plant records show that influent feed rate and chemical addition rates varied considerably during both days of the plant test. Influent feed rate varied from 47-83 gallons per minute; ferric sulfate was added in the range 720-1680 grams per hour; and lime was added at rates from 4.0-8.6 kilograms per hour. The reasons for this variation are unknown.

The clarifier was exceptionally clear, with rapid settling of sludge. Sludge was not discharged from the clarifier during the two-day test. On Wednesday, the day in which samples were collected and material balances calculated, the clarifier operated six hours and 50 minutes.

4.4 Gravity Filter: The gravity filter had been backwashed the preceding Friday, 04/20/01, in preparation for the plant test. It was not backwashed during the test.

4.5 RP Filter: There were no indications of poor performance from this bag filter. The filter membrane was not backwashed during the test. Filter pore size was 10 microns. The RP filter also operated for six hours and 50 minutes on the second day of the plant test.

4.6 Tubular Ultrafilter: The TUF unit was operated at typical conditions of flow, temperature, and pressure, and with typical routing of process streams. Throughputs were about 750 gpm feed (makeup and recycle). Membranes, in service since October 1999, had a pore size of 10^5 molecular weight, or about 0.08 micron. The TUF operated 7 hours and 30 minutes on Wednesday, 04/25, and for two hours and 30 minutes on Thursday, 04/26.

The TUF operated with abnormally high permeate flow rates during the plant test. Permeate flows started both days above 70 gpm, and deteriorated only slightly to about 65 gpm. Typically, each day starts with TUF permeate flows of about 70 gpm, but decreases within the first 30 minutes of operation to about 55 gpm.

4.7 Reverse Osmosis: The RO unit was operated at typical conditions of flow, temperature, and pressure. The RO unit used a high-rejection polyamide thin-film composite membrane (Osmonics, 815 HR(PA), 8”x40”, nominal NaCl rejection of 99%). Feed was pH-adjusted downward, from about 10.6 to about 6.0, by bubbling carbon dioxide gas into TK-9. The RO unit operated five hours and 35 minutes on Wednesday, 04/25, and two hours and 10 minutes on Thursday, 04/26.

4.8 Storage Tanks: Four storage tanks came into play during the course of the two-day plant test – the 17K, TK-9, TK-71, and TK-72. Information on each is presented below.

Tank 17K: Feed to the clarifier was drawn from the 17,000-gallon, or 17K, tank in building 50-02. This is a below-grade steel vessel set within a concrete in-ground cell. Portions of the 40,000-gallon special batch influent were added to TK-17 from the 100K tank on two occasions during each day of the plant test.

Tank TK-9: Permeate from the TUF goes to TK-9, which serves as the feed tank for the reverse osmosis unit. TK-9 water levels are recorded continuously by the plant controller (G2). On Tuesday, prior to commencement of the first, or flush, day of the plant test, levels were reduced from 66% to 6% by transferring waters to the effluent tanks. On Wednesday, the day on which samples were collected and material balances calculated, water level in TK-9 rose to 82% as permeate was received from the TUF, then declined gradually to 61% as the RO was operated. On Thursday, 04/26, this rise-and-fall sequence was repeated. Levels initially rose from 66% to 79% as permeate was received from the TUF, and then gradually declined to 67% once the RO unit was started up.

Tank TK-71: Effluent from the RP filter goes to TK-71, which serves as the feed tank for the tubular ultrafilter. Water levels in TK-71 are recorded by G2. On Tuesday, prior to commencement of the first, or flush, day of the plant test, levels were reduced from 76% to 19% by transferring waters to the 75K tank. Levels then gradually rose during the first day of the test to 58% as the clarifier was operated but the TUF was kept largely idle. On Wednesday, the day in which four of the five sets of membrane samples were collected, water levels were first reduced from 58% to 22% by operating the TUF. Levels then rose to 73% as the clarifier was operated while the TUF was idled, and then gradually fell to 59% after the TUF was started. On Thursday, the day on which the final set of membrane samples was collected, TK-71 tank level rose from 59% to 72%, then fell to 62% as the TUF was placed into operation.

Tank TK-72: TUF concentrate is recycled through TK-72 back into the TUF. This recycle stream is used to help maintain the extremely high (750 gpm) feed rate to the TUF. Water levels in TK-72 are recorded by G2. On Tuesday, prior to commencement of the first, or flush, day of the plant test, levels were reduced from 99% to 6% by transferring waters to the 75K tank. Levels then gradually rose during the first day of the test to 78%. On Wednesday, the day in which four of the five sets of membrane samples were collected, water levels were first reduced from 78% to 35% by operating the TUF. Levels then rose to 99% as the clarifier was operated while the TUF was idled, and then gradually fell to 77% after the TUF was started. On Thursday, the day on which the final set of membrane samples was collected, TK-72 tank level fell from 77% to 74% since the TUF started about 30 minutes before the clarifier was started, but then returned to 77% by the end of the day.

4.9 Field Records: Sampling personnel recorded sample collection times and operating data when each of the five sample sets were collected. Sample collection times varied from 50 to 100 minutes between sampling events. Operating data was recorded as follows. For the clarifier/ gravity filter, R.L. McClenahan recorded pH into and out of the clarifier, dial settings on the feed pumps for ferric sulfate and lime, clarifier feed rate, and water level in the gravity filter. For the TUF, J.C. Del Signore recorded pH of the makeup stream from TK-71 and three flow rates – concentrate into TK-72, recycle, and TUF permeate. For the RO unit, J.C. Del Signore recorded feed pH and three flow rates – feed, concentrate, and permeate streams. A compilation of field sampling data is given in Table 4-2.

Table 4-2
Field Data Recorded at Each Sampling Time Step, 04/25/01

Operation	Parameter	Units	1	2	3	4	5
Clarifier	Sampling Time	---	11:10	12:40	14:10	15:00	16:40
Clarifier	$Fe_2(SO_4)_3$ flow	setting	220	150	150	150	115
Clarifier	$Ca(OH)_2$ flow	setting	90	110	110	125	115
Clarifier	pH – in	s.u.	10.1	9.9	9.9	10.5	10.8
Clarifier	pH – out	s.u.	10.9	10.6	10.5	10.5	11.2
Clarifier	Feed rate	gpm	47	74	58	58	--
Gravity filter	Level	%	26	26	41	43	54
TUF	Sampling Time	---	12:50	14:00	15:15	16:30	15:45 [a]
TUF	Feed pH	s.u.	10.1	10.1	10.1	10.1	10.0
TUF	Recycle [b]	gpm	714	714	715	712	750
TUF	Concentrate [c]	gpm	71	71	75	81	100
TUF	Product	gpm	74	71	67	66	66
RO	Sampling Time	---	12:30	14:00	15:15	16:30	15:55 [a]
RO	pH	s.u.	11.0	9.1	8.9	8.1	8.6
RO	Feed	gpm	74	73	72	72	67
RO	Concentrate	gpm	8.6	9.0	9.0	9.1	7.0
RO	Permeate	gpm	68	66	66	64	65

a: The fifth set of membrane samples were collected 04/26, about 70-90 minutes after the start of membrane operations.
b: Flow meter is labeled "recycle", but measurement point is feed to TUF.
c: Concentrate flow into TK-72; does not include spongeball flow into TK-72.

5.0 Flows

Flows were calculated for each unit operation using information supplied by the G2 process control system. Flows balanced quite nicely around the reverse osmosis unit (25,700 gallons into the unit; 25,100 gallons out of the unit), but a flow discrepancy of 9500 gallons existed for the remainder of the MTP. One-day and two-day water balances were performed in attempts to decipher the discrepancy, but were successful only in confirming that from 6200 to 9500 gallons of water mysteriously appeared in the MTP during the two-day test period. These approaches are detailed in Section 5.1, 5.2, and 5.3 below. Section 5.3 summarizes water flows.

5.1 Methods To Estimate Flows for Each Unit Operation

Seven different methods were available for measuring and/or estimating flows into and out of each MTP unit operation:

- Method A, Field Data: Samplers recorded flow rates when samples were collected, as shown in Table 4-2. Five sample sets were collected at the clarifier on Wednesday, 04/25, but flow rates were recorded only on the first four sampling events. Four sample sets were collected on 04/25 at the membrane unit operations, and flows were recorded each time. The weakness of using this flow estimation method lies in the fact that there were only four data points for any given process stream.

- Method B, G2 Flow Charts: Some flow rates are continuously monitored, and then graphed by G2, the plant process control system. Flow rate data contained in the graphs can be integrated to arrive at weighted average flow rate. Examples are shown in several tables in Appendix A. A weakness of this method lies in the lack of detail in the graphs; one must estimate both flows and flow duration, which introduces uncertainty. Nonetheless, for those process streams for which flow graphs are prepared, this is probably the most accurate of the flow estimating methods.

- Method C, Daily Summary Flow Rates: The G2 process control system prints out a "Daily Summary" report for each day of operation. The Daily Summary reports average flow rate for some process streams.

- Method D, Daily Summary Flow Totals: The Daily Summary also reports total flow for the day for some process streams,. This data can be divided by the operating time for the relevant unit operation on Wednesday, 04/25 (See Table 4-1.) to arrive at average flow rate.

- Method E, Changes in Tank Volumes: Some flow rates can be estimated by dividing the rise or drop in tank volume by the operating time for the relevant unit operation on Wednesday, 04/25. For example, RO permeate was added to the north and south frac

tanks. The volume change for these tanks therefore should equal the total quantity of RO permeate generated on 04/25.

- Method F, Water Balance: Some flows are not metered or monitored (e.g., flows into and out of the gravity and RP filters, and must be calculated from other flows.

- Method G, Process Knowledge: Several process streams have no flow meters, and no easy means of performing a mass balance. Process knowledge gained during Plant Test 2000 was used for these streams.

Up to five methods were used to estimate the flow of any individual process stream. Methods used to estimate flows for each process are detailed in Appendix A, along with the rationale for selecting from among the different estimates when multiple methods were used.

5.2 Unit Operation Flow Summary

The flow estimates indicate an unexplained difference of about 10 gallons per minute between flows out of the conventional unit operations (clarifier, gravity filter, RP filter) and flows into the membrane unit operations. Table 5-1 summarizes the data.

Table 5-1
Unit Operations Flow Summary for 04/25/01

	#Streams In	#Streams Out	Flow In (gpm)	Flow Out (gpm)	Flow In (gal)	Flow Out (gal)
Clarifier	4	2	67	67 [e]	27,300	27,300
Gravity Filter	1	2	67 [e]	67 [e]	27,300	27,300
RP Filter	1	1	62 [e]	62 [e]	25,600	25,600
TUF	1	2	62 [e]	75	25,600	35,100
RO	1	2	77	75	25,700	25,100

e: Estimated by mass balance; physical data not available.

When examining Table 5-1, it is important to compare flows into and out of the same unit operation, and not flows into and out of different unit operations due to the differing length of time each was operated on 04/25/01. The clarifier, gravity filter, and RP filter were operated 410 minutes; the TUF operated 440 minutes; and the RO operated just 335 minutes. It must also be noted that Table 5-1 shows a 9500-gallon discrepancy for the TUF. The discrepancy could have existed in any of the first four unit operations, however, because flows out of the clarifier, and flows into and out of the gravity filter and RP filter, could only be estimated by mass balance.

5.3 MTP Water Balances

Because flows did not balance when examining individual unit operations, a water balance was performed on the entire RLWTF for Wednesday, 04/25/01. With this approach, an

estimated 6200 more gallons of water existed at the end of the day than could be accounted for. In another attempt to balance water flows for Plant Test 2001, a water balance was performed for *both* days of the test, 04/24/01 and 04/25/01. The two-day balance estimated that 8100 more gallons of water existed at the end of the end of the two days than could be accounted for. This number lies between the discrepancies estimated for the one-day water balance and the unit operations approach, and therefore confirms the mystery.

5.4 Flow Summary

Flow calculations are summarized in Figures 5-1 through 5-6. Feed to the plant from the 17K tank averaged 60 gpm; product from the RO unit averaged 66 gpm. MTP water inventory started at 141,000 gallons and ended at 146,000 gallons. Feed to the MTP on the second day of the test, when samples were collected, totaled 24,760 gallons. More water (6200-9500 gallons) existed at the end of the test than could be accounted for. Four potential explanations for the discrepancy are hypothesized.

The first possible explanation is that more industrial (tap) water was introduced to the clarifier than estimated. Specifically, industrial water for chemical dissolution could have been added at greater than six gallons per minute, and/or it could have been added for longer than the two hours estimated by operations personnel[1]. Since this flow was neither metered nor monitored, there is no way to quantify this possibility.

The second possible explanation is that pump seals could have developed a large leak, or could have broken through. Four pumps in the MTP use seal water.

That tap water could have been used for membrane flushing during the two-day test, rather than RO permeate as assumed. Flush volumes were 750 gallons on 04/24 and 1600 gallons on 04/25, and could explain part of water imbalance.

Finally, there are uncertainties and measurement errors in tank and equipment volumes. For example, tank farm tanks have a physical capacity of 20,000 gallons, but overflows are set below full capacity, and a level reading of 100% is calibrated to a volume of about 18,000 gallons. Since the difference in beginning and ending inventories of water factored into mass balances, and since water inventories were large relative to water flows, these uncertainties could have contributed to the water discrepancy. (They apparently did not in Plant Tests 2000, since flows balanced within five percent.)

Investigation into the mystery should continue, and has been listed as one of the recommendations of this report.

[1] At the time of Plant Test 2001, a portion of gravity filter effluent was routinely recycled and used for dissolving chemicals fed to the clarifier. At the start of the test, however, mechanical problems with the recycle pump necessitated the use of industrial (tap) water instead. Operators estimated that it took two hours to repair the recycle pump. Industrial water was used for chemical dissolution during the repair time.

Figure 5-1
Average Flow Rates for the Clarifier, Gravity Filter, and RP Filter on 04/25/01

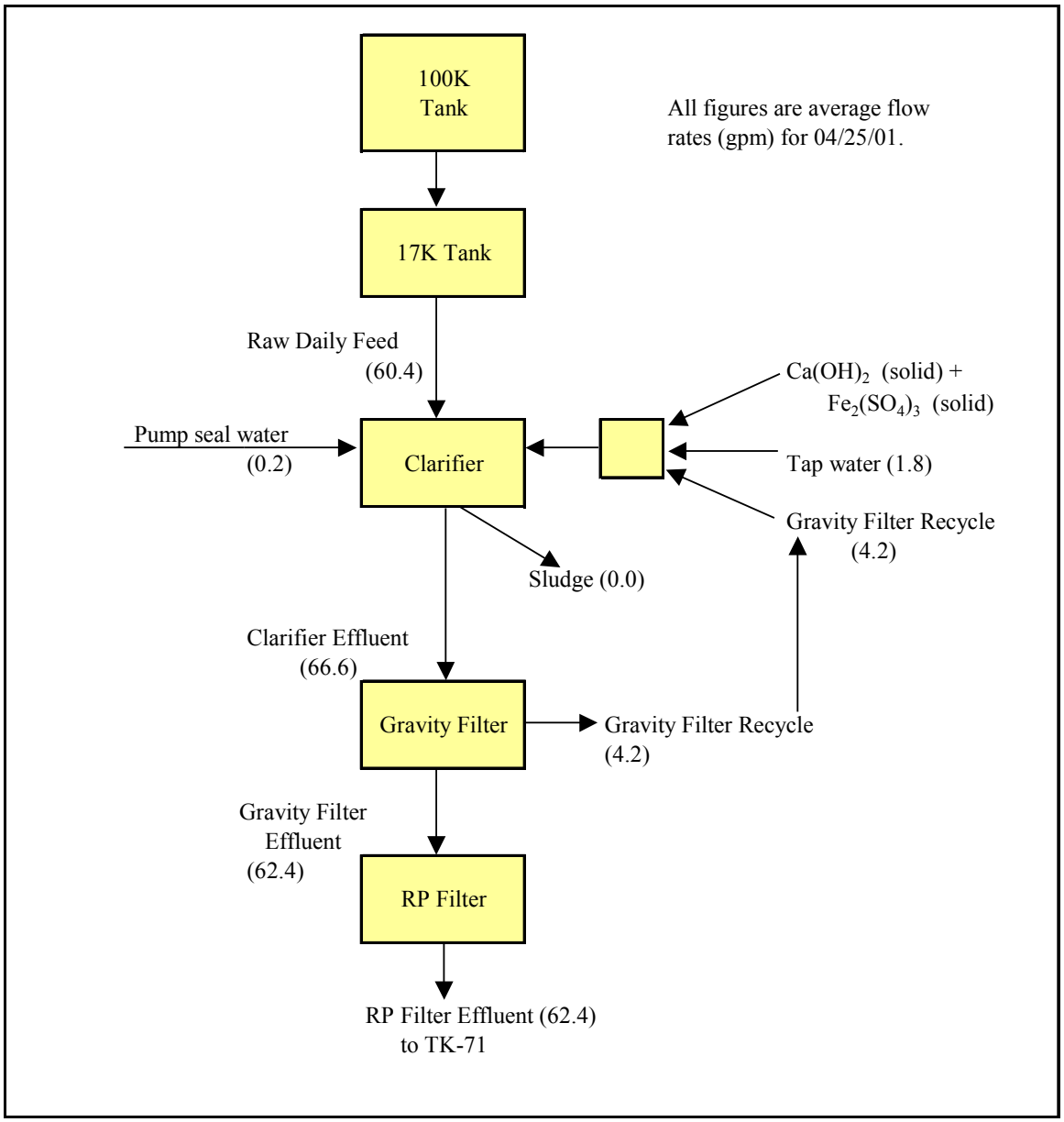

Figure 5-2
Average Flow Rates for the Tubular Ultrafilter on 04/25/01

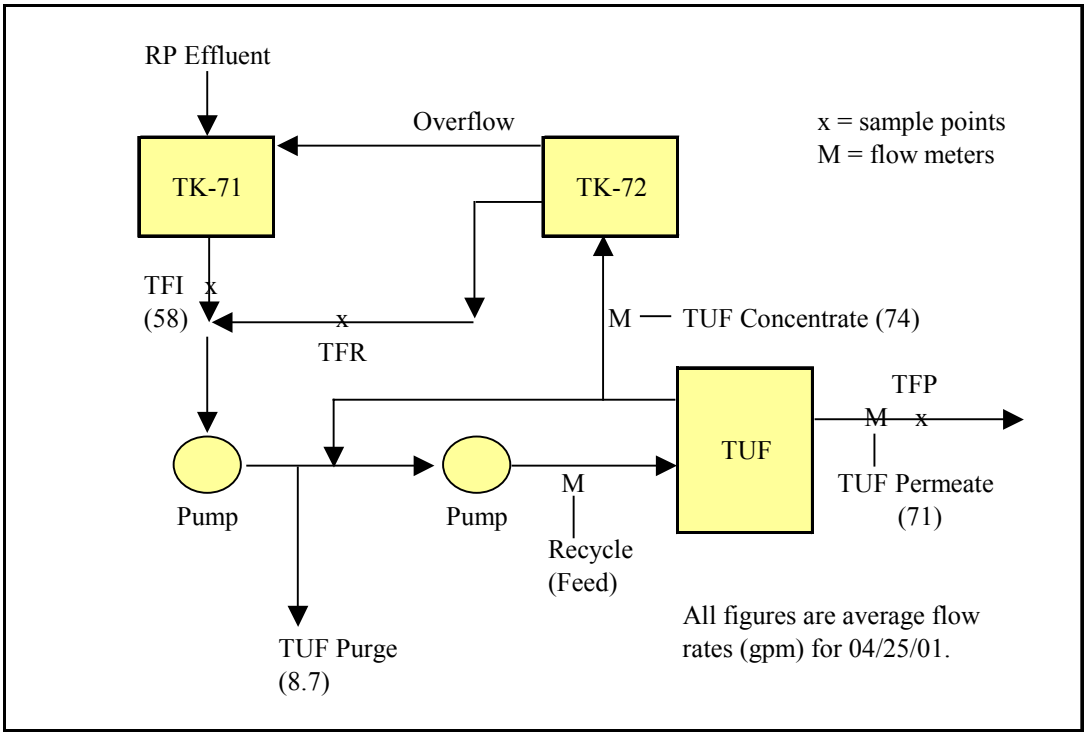

Figure 5-3
Average Flow Rates for Reverse Osmosis on 04/25/01

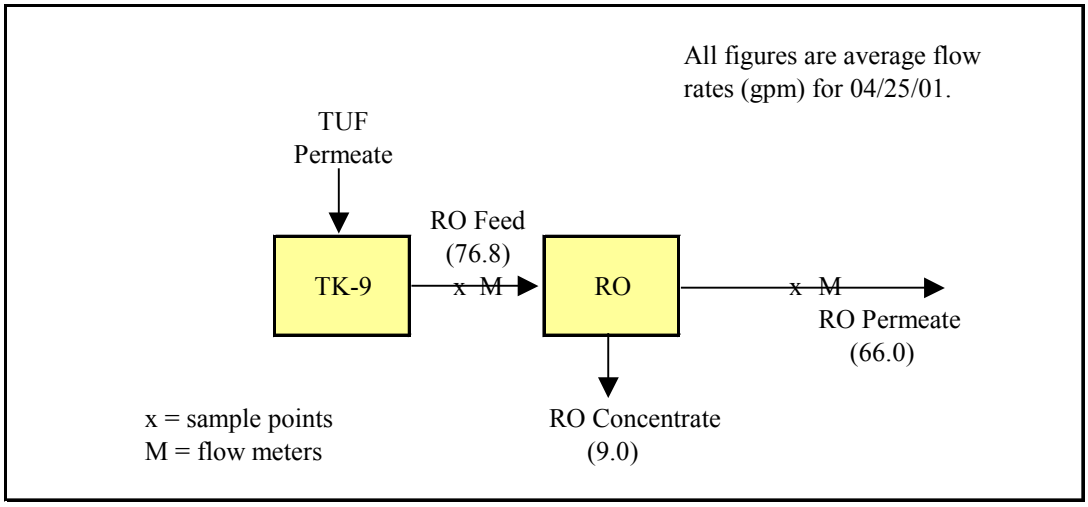

Figure 5-4
Flows (Total) on 04/25/01

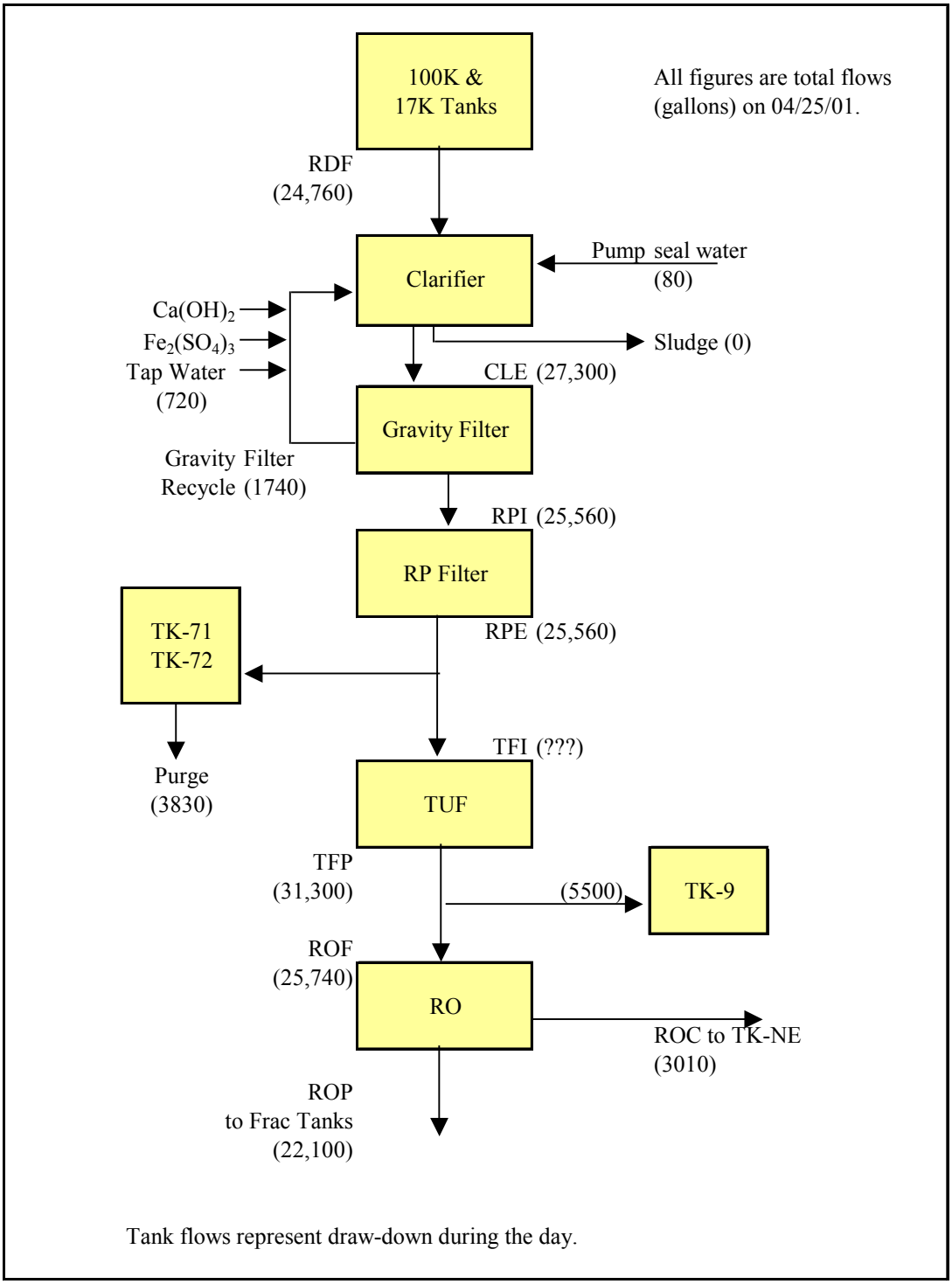

Figure 5-5
One-Day Overall Water Balance (04/25/01)

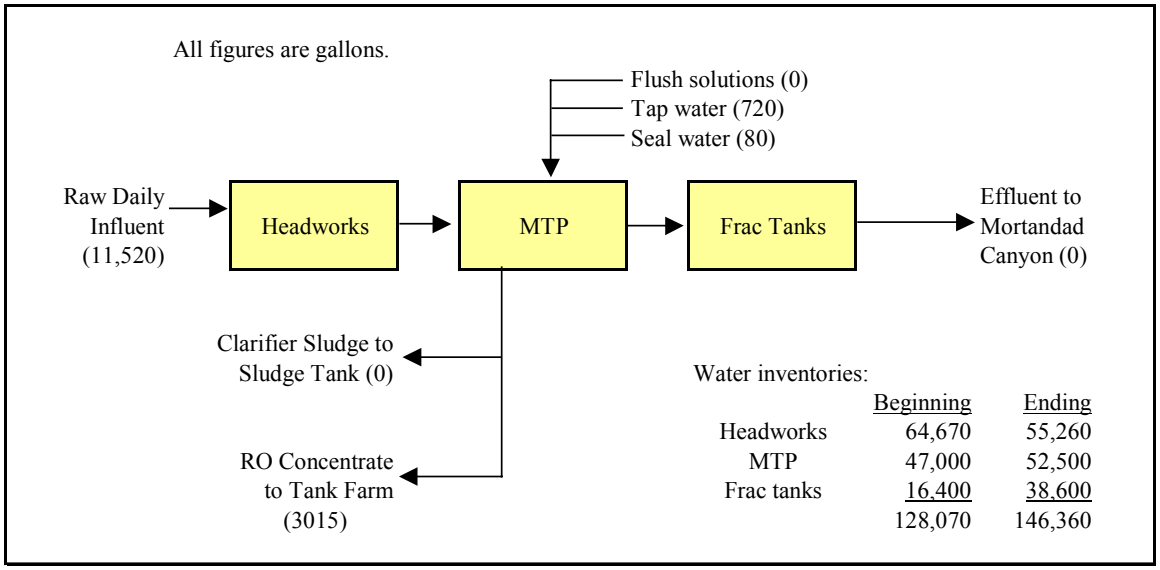

Figure 5-6
Two-Day Overall Water Balance (04/24 & 04/25)

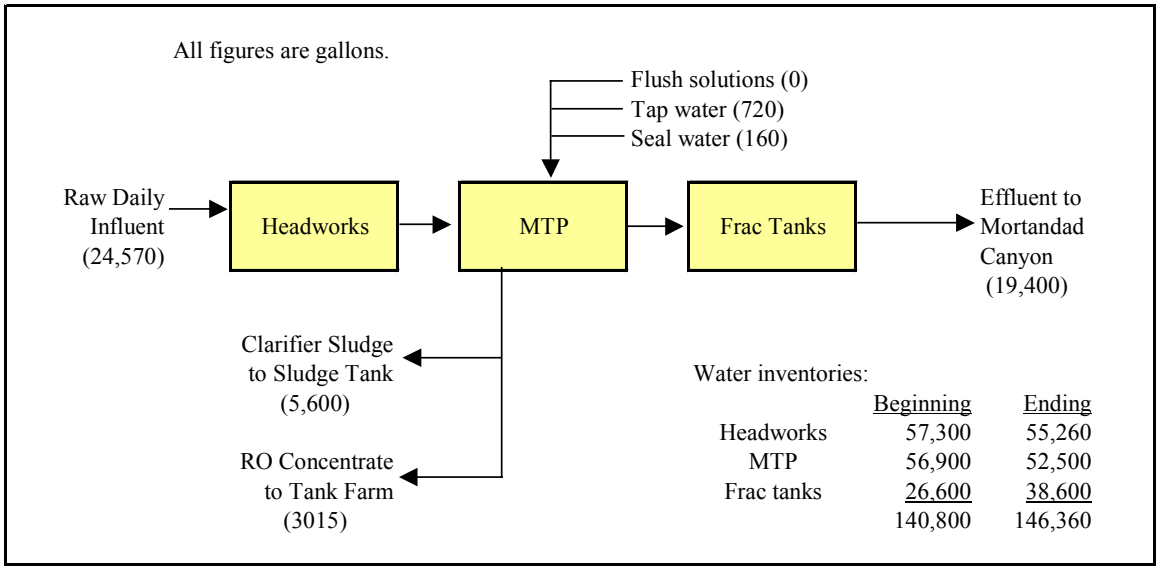

6.0 Sample Results

6.1 Presentation of Sample Results

General: Sample results are presented in this chapter for most parameters analyzed during Plant Test 2001. Parameters are discussed in the same five groups presented in Chapter 2: conventional water-quality parameters, metals of concern, other metals, anions, and radioactive parameters.

Tables: Two tables are presented for each group of parameters. The first table presents average concentrations at each sample point. As shown in the tables and as explained in Chapter 2, some parameters were analyzed at nine sample points while others were analyzed at only five points. For metals, the tables present two values for clarifier influent. The first (CLI-D) is the result from digesting the entire sample, which yielded total metal concentration in the sample, both soluble and insoluble. The second value for clarifier influent (CLI-F) is the analytical result after filtering the sample to remove solids.

The second table for each group of parameters reflects MTP performance by converting sample results to decontamination factors (DF), a term that is nearly the inverse of "percent removed". Mathematically:

$$\text{DF} = (\text{concentration in}) \div (\text{concentration out})$$

Three decontamination factors are listed. The first DF represents removal through the TUF; the second represents removal across the RO; and the third is total removal of each parameter across the MTP. Mathematically:

DF through the TUF = CLI ÷ TFP for parameters analyzed at all nine sample points
DF through the TUF = CLI ÷ ROF for parameters not analyzed at the TUF
DF across the RO = ROF ÷ ROP
DF across the MTP = CLI ÷ ROP

In the case of metals, which have two analytical results for CLI, the digested sample result, CLI-D, is inserted into the above formulae. Due to averaging and analytical uncertainty, decontamination factors are generally presented to only two significant figures.

Graphs: Sample results are also presented in this chapter as bar graphs. The graphs plot concentration for one or more parameters at the nine sampling points (five, for some parameters) in the MTP. Graphs can be dedicated to a single parameter, or multiple parameters are shown on a single graph. Graphs with but a single parameter show the minimum (left bar), maximum (right bar), and average (center bar) analytical results. Graphs with more than one parameter show only average analytical results. The basis for grouping parameters onto the same graph was usually that sample results were of similar magnitude.

Qualifier: When reviewing the sample results, the reader is cautioned to keep in mind that the water balance failed by 6200-9500 gallons. To place this in perspective, the feed batch consisted of 40,200 gallons (Table 3-1), and the MTP inventory of water at the start of the test was 30,000 gallons. Since it is unknown at what points the mystery waters entered the MTP, sample results may have a large degree of uncertainty. The mystery waters could have been industrial water, in which case sample results would be biased low. The mystery waters could also have been influent from the headworks or process waters from the MTP or from secondary treatment processes, in which case sample results would be biased high. (Since water flows into and out of the RO unit balanced quite well, these qualifiers only apply when evaluating results for the six non-RO sampling points.)

6.2 Conventional Parameters

Table 6-1 presents sample results (averages) for ten conventional water-quality parameters. TDS results are shown twice because TDS analyses were performed by two different methods, via a gravimetric technique and by using a conductivity probe. Results for six of these are then plotted in Figures 6-1 through 6-6.

The graphs show multiple treatment patterns. Ammonia and COD were unaffected by the first four unit operations of the MTP; removal occurred only at the reverse osmosis treatment step. Total alkalinity (TALK) declined slightly through the TUF, and then was 90% removed at the RO. Total dissolved solids (TDS) increased about 20% across the clarifier due to chemical addition; were unaffected by the RP filter and the TUF; and were then 90% removed at the RO. Suspended solids (TSS) were reduced at each unit operation except for the RP filter, an indication that effective pore size of the gravity filter is the same as that for the RP filter.

Table 6-6 sums up this information by presenting decontamination factors for six of the conventional parameters. DF through the TUF ranged from 0.8 for TDS to 13 for TSS. Total decontamination factors ranged from five to 40.

6.3 Metals of Concern

Analytical results for these 14 metals are presented in Table 6-2. Results for those that are process concerns have units of parts per million; results for metals of regulatory concern are stated in parts part per billion. These results are then graphed for 11 of these in Figures 6-7 through 6-11. Cadmium, cobalt, and chromium are not illustrated because analytical results were zero or nearly so.

Two treatment patterns emerge. The single valence metals sodium and potassium were not affected by the first four unit operations; removal (90% for both metals) occurred during reverse osmosis. Multivalent metals, on the other hand, were typically removed at each unit operation. Calcium was the exception. Concentrations in effluent from the gravity filter were higher than concentrations in clarifier influent, due to the addition of lime at the clarifier.

Table 6-7 sums up this information by presenting decontamination factors for the metals of concern. If one overlooks sample results that are near the lower detection limit or that are puzzling, then DF through the TUF ranged from 0.4 for calcium to essentially total removal of manganese. Total decontamination factors ranged from ten to more than 3,000.

6.4 Other Metals

Analytical results for the remaining 14 metals are presented in Table 6-3. Concentrations for these lesser metals are all expressed in parts per billion. These results are then graphed in Figures 6-12 through 6-16. Data for about half of these metals is questionable due to low concentrations. Table 6-8 then sums up this information as decontamination factors. DF through the TUF ranged from about 1.0 for half the metals greater than 35 for selenium. Total decontamination factors ranged from ten to more than 40.

6.5 Anions

Analytical results for six anions are presented in Table 6-4 and Figures 6-17 through 6-19. Results for chloride, nitrate, and sulfate are in parts per million; perchlorate, fluoride, and phosphate results are in parts per billion. Only fluoride, which precipitates as calcium fluoride in the clarifier, and phosphate are removed in the first four unit operations. The remaining four anions, all of which have a valence of minus one, are soluble and thus unaffected until reaching the RO. Table 6-9 sums up this information as decontamination factors. DF through the TUF ranged from 0.8 for sulfate, which is added at the clarifier, to greater than six (phosphate). Total decontamination factors ranged from greater than six to 28.

6.6 Radioactive Parameters

Gross alpha, gross beta, and tritium analytical results appear in Table 6-5; they are graphed in Figures 6-20, 6-21, and 6-22. Decontamination factors (Table 6-10) were 4600 for gross alpha, 5.9 for gross beta, and 1.3 for tritium (Table 6-10).

In order to learn more about the makeup of alpha emitters, alpha spectroscopy was performed on composites of the five samples collected at each sample point. Analytical results are shown in Table 6-11 and 6-12. The first three columns of Table 6-11 compare gross alpha analytical results obtained (a) by averaging results from the five time steps, (b) by gross alpha analysis of the composite sample, and (c) by summing the concentrations of the individual isotopes evaluated via alpha speciation. The data agree reasonably well throughout (e.g., 2410, 2200, and 2433 pC_i/L for the CLE sample point), lending confidence that the speciation results are meaningful. The next six columns in Table 6-11 then present alpha activity for six isotopes. These columns reveal that ^{238}Pu contributed about three-fourths of the alpha radioactivity in clarifier influent; that ^{239}Pu and ^{241}Am contributed about one-fourth of the alpha radioactivity; and that the three uranium isotopes contributed just one percent.

Table 6-12 then converts these radioactive concentrations (pC_i/L) to chemical concentrations (parts per trillion and parts per quadrillion). The conversion is achieved by dividing the alpha radioactivity by the specific activity for each isotope. This is illustrated below for ^{235}U and ^{238}Pu in clarifier influent.

For ^{235}U: (4.3 pC_i/L) ÷ (2.1 E+6 pC_i/g) = 2.05 E-6 g/L
= 2.05 μg/L
= 2.05 parts per billion
= 2050 parts per trillion

For ^{238}Pu: (4700 pC_i/L) ÷ (1.74 E+13 pC_i/g) = 2.70 E-10 g/L
= 0.27 picograms/L
= 0.27 parts per trillion
= 270 parts per quadrillion

This chemical data is then presented in Table 6-13 as decontamination factors for the individual isotopes. The data shows that plutonium and americium behavior was similar through the first four unit operations, with decontamination factors 140, 220, and 250. This is not surprising since these elements are almost chemically identical. Quantitative conclusions about DF for plutonium and americium across the RO, and for the uranium isotopes in general, are tentative at best due to low levels of radioactivity. Specifically, ROP concentrations such as 0.0 pC_i/L and 0.4 pC_i/L in the denominator of the DF equation create large uncertainty in the DF result.

The biggest surprise of the plant test, however, is not visible in any of these tables or graphs. One needs to compare the gross alpha concentration in clarifier influent to gross alpha concentration in the influent feed batch to make this discovery. Gross alpha was 482 nC_i/L in the feed batch, but just 9.2 nC_i/L as clarifier influent. Gross beta was 93 nC_i/L in the feed batch, but just 1.3 nC_i/L as clarifier influent. Decontamination factors of 52 and 72 were thus achieved *before* the influent ever reached the MTP! (Tritium, as one would expect, was unaffected – 12 versus 13 nC_i/L.)

This result confirms the success, on a plant-wide scale, of two of the treatment recommendations made in the Secondary Stream Study – preoxidation and aging.

6.7 Influent Quality

The test showed that influent quality was good. Only three metals (iron, manganese, mercury), two anions (perchlorate and fluoride), and alpha and beta radioactive species were present in concentrations that approximated or exceeded discharge standards.

Table 6-1
Sample Results – Conventional Parameters
(average of five sampling steps)

Sample Point	pH (s.u.)	COD (mg/L)	Cond. (µs/cm)	NH_3-N (mg/L)	Total SiO_2 (mg/L)	RxSiO_2 (mg/L)	PALK (mg/L as $CaCO_3$)	TALK (mg/L as $CaCO_3$)	TDS [A] (mg/L)	TDS [B] (mg/L)	TSS (mg/L)
CLI	8.7	38	661	4.0	65	61	11	124	441	432	62
CLE	10.2		882				42	68	588	550	44
RPI	10.2	36	858	4.3	36	33	63	92	571	554	13
TFI	10.1	46	844				58	92	562	582	12
TFR	10.1	50	867				65	99	578	588	36
TFP	10.1	39	804				61	94	536	526	2.2
ROF	7.6	38	797	4.1	40	38	8	97	531	440	4.8
ROC	7.5	323	5,160	28	312	101	24	713	3,440	4,000	10.8
ROP	7.2	7	66	0.8	3.9	1.8	3	11	44	42.4	1.6
Std.	6-9	125							1,000	1000	
Analysts	VPW	WCB	VPW	KAS	MAK	KAS	KAS	KAS	VPW	WCB	WCB

WCB: Wendy Bisset
MAK: Mark Kozubal
KAS: Kathy Straw
VPW: Pete Worland

A: TDS measured via conductivity probe.
B: TDS measured via gravimetric method.
Std: NPDES, NMED, or DOE discharge standard

Table 6-2
Sample Results – Metals of Concern
(average of five sampling steps)

Sample Point	PROCESS CONCERNS							REGULATORY CONCERNS						
	Ca (mg/L)	Fe (mg/L)	K (mg/L)	Mg (mg/L)	Mn (mg/L)	Na (mg/L)	Si (mg/L)	As (µg/L)	Cd (µg/L)	Co (µg/L)	Cr (µg/L)	Cu (µg/L)	Hg (µg/L)	Pb (µg/L)
	Ca	Fe	K	Mg	Mn	Na	Si	As	Cd	Co	Cr	Cu	Hg	
CLI-D	30	3.15	19	3.0	13	87	30	44	0	11	6	236	2.4	0
CLI-F	34	3.15	22	3.3	14	101	33	40	0	10	4	262		0
RPI	80	0.76	17	1.8	0.09	91	17	39	0	11	10	152	0.57	0
ROF	74	0.06	13	1.6	0.00	78	19	19	0	12	6	120	0.04	0
ROC	604	0.04	109	13.4	0.01	616	146	38	1	24	59	946	0.23	0
ROP	1.6	0.000	1.5	0.07	0.00	8.4	1.8	30	0	11	0	13	0.00	0
Std.		1.0			0.20			100	10	50	50	500	0.77	50

CLI-D: Entire sample digested, then analyzed
CLI-F: Sample filtered, and only the filtrate analyzed.
TUF samples were not analyzed for metals.

Analysts: Mark Kozubal

Std: NPDES, NMED, or DOE discharge standard

Table 6-3
Sample Results – Other Metals
(average of five sampling steps)

Sample Point	Ag (µg/L)	Al (µg/L)	B (µg/L)	Ba (µg/L)	Be (µg/L)	Li (µg/L)	Mo (µg/L)	Ni (µg/L)	Se (µg/L)	Sn (µg/L)	Sr (µg/L)	Ti (µg/L)	V (µg/L)	Zn (µg/L)
	Ag	Al	B	Ba	Be	Li	Mo	Ni	Se	Sn	Sr	Ti	V	Zn
CLI-D	10	600	46	6	8	169	44	101	0	64	47	35	2	750
CLI-F	13	608	47	7	8	187	15	105	3	53	52	31	4	802
RPI	16	408	43	4	7	150	37	95	14	11	60	5	1	147
ROF	7	418	39	4	8	108	33	76	26	7	59	0	2	48
ROC	11	442	138	25	8	988	300	238	44	33	496	0	9	424
ROP	10	406	25	0	8	13	0	64	31	4	2	0	1	0
Std.	50	5,000	750	1,000			1,000	200	5				100	10,000

CLI-D: Entire sample digested, then analyzed
CLI-F: Sample filtered, and only the filtrate analyzed.
TUF samples were not analyzed for metals.

Analysts: Mark Kozubal

Std: NPDES, NMED, or DOE discharge standard

Table 6-4
Sample Results – Anions
(average of five sampling steps)

Sample Point	Chloride (mg/L)	ClO_4 (µg/L)	Fluoride (µg/L)	NO_3-N (mg/L)	PO_4-P (µg/L)	SO_4 (mg/L)
	Cl	ClO_4	F			SO_4
CLI	41	2,076	1,486	3.6	416	79
CLE						
RPI	41	1,651	1,108	3.5	<70	73
TFI						
TFR						
TFP						
ROF	38	1,198	734	3.1	<70	96
ROC	334	13,290	4,240	30.6	<70	1,005
ROP	2	136	53	0.4	<70	6
Std.	250	18	1,600	10		
Analysts	EMH	EMH	EMH	EMH	EMH	EMH

Table 6-5
Sample Results – Radioactive Parameters
(average of five sampling steps)

Sample Point	Gross α (pCi/L)	Gross β (pCi/L)	Tritium (nCi/L)
CLI	9,240	1,348	13
CLE	2,410	630	10
RPI	866	455	10
TFI	1,730	482	10
TFR	4,240	606	12
TFP	64	302	10
ROF	42	290	10
ROC	328	3,200	14
ROP	2	230	10
Std.	30		20
Analysts	WCB	WCB	WCB

WCB: Wendy Bisset
EMH: Vangie Hodge
Std: NPDES, NMED, or DOE discharge standard

Table 6-6
Decontamination Factors – Conventional Parameters
(average of five sampling steps)

	DF-TUF	DF-RO	DF-Total
Ammonia (NH_3-N)	1.0	5.0	5.0
Chemical Oxidation Demand	1.0	5.4	5.4
Conductivity	0.8	12	10
Silica (SiO_2)	1.6	10	17
Total Alkalinity	1.3	8.8	11
Total Dissolved Solids	0.8	12	10
Total Suspended Solids	13	3	40

Table 6-7
Decontamination Factors – Metals of Concern
(average of five sampling steps)

	Valence States	DF-TUF	DF-RO	DF-Total	Notes
Process:					
Calcium (Ca)	+2	0.4	46	20	Increase at clarifier
Iron (Fe)	+2,+3	50	>60	>3000	
Potassium (K)	+1	1.5	8.7	10	
Magnesium (Mg)	+2	1.9	23	40	
Manganese (Mn)	+2,+3	>13	--	>13	ROF = ROP = zero
Sodium (Na)	+1	1.1	9.3	10	
Silicon (Si)	+2,+4	1.5	11	17	
Regulatory:					
Arsenic (As)	+3,+5	2.3	0.6	1.5	Anal. uncertainty?
Cadmium (Cd)	+2	--	--	--	All zeros
Cobalt (Co)	+2,+3	1.0	1.0	1.0	At LDL ?
Chromium (Cr)	+2,+3	1.0	>6	>6	ROP = zero
Copper (Cu)	+2	2.0	9.2	18	
Mercury (Hg)	+1,+2	6	>4	>24	ROP = zero
Lead (Pb)	+2,+4	--	--	--	All zeros

DF-TUF: Decontamination factor through four units (CL, GF, RP, TUF)
DF-TUF: Decontamination factor across the RO
DF-TUF: Decontamination factor for the MTP

Possible valence states from Handbook of Chemistry and Physics.

Table 6-8
Decontamination Factors – Other Metals
(average of five sampling steps)

	Valence States	DF-TUF	DF-RO	DF-Total	Notes
Silver (Ag)	+1	1.4	0.7	1.0	At LDL ?
Aluminum (Al)	+3	1.4	1.0	1.5	
Boron (B)	+3	1.2	1.6	1.8	See footnote.
Barium (Ba)	+2	1.5	>4	>6	ROP = zero
Beryllium (Be)	+2	1.0	1.0	1.0	Results near zero
Lithium (Li)	+1	1.6	8.3	13	
Molybdenum (Mo)	+6	1.3	>33	>44	ROP = zero
Nickel (Ni)	+2,+3	1.3	1.2	1.6	
Selenium (Se)	+4,+6	0.1	0.8	0.1	See footnote.
Tin (Sn)	+2,+4	9.1	1.8	16	
Strontium (Sr)	+2	0.8	30	24	
Titanium (Ti)	+2,+3,+4	>35	--	>35	ROF = ROP = zero
Vanadium (V)	+2,+3,+4	1.0	2.0	2.0	
Zinc (Zn)	+2	16	>48	>750	ROP = zero

Arsenic, boron and selenium may be complexed with oxygen and/or hydrogen. If so, the complex would have a negative valence state. The complex would act as an anion, and would be soluble. Removal would not occur until the RO.

Table 6-9
Decontamination Factors – Anions
(average of five sampling steps)

	Valence State	DF-TUF	DF-RO	DF-Total
Chloride (Cl)	-1	1.0	19	20
Perchlorate (ClO_4)	-1	1.7	8.8	15
Fluoride (F)	-1	2.0	14	28
Nitrate (NO_3-N)	-1	1.2	7.8	9.0
Phosphate (PO_4)	-3	>6	--	>6
Sulfate (SO_4)	-2	0.8	16	13

DF-TUF: Decontamination factor through four units (CL, GF, RP, TUF)
DF-TUF: Decontamination factor across the RO
DF-TUF: Decontamination factor for the MTP

Possible valence states from Handbook of Chemistry and Physics.

Table 6-10
Decontamination Factors – Radioactive Parameters
(average of five sampling steps)

	DF-TUF	DF-RO	DF-Total	Notes
Gross Alpha	144	21	4600	
Gross Beta	4.5	1.3	5.9	
Tritium	1.3	1.0	1.3	
U-234	>6	--	>6	ROP = zero
U-235	54	>38	>2000	ROP = zero
U-238	37	>5100	>E+5	ROP = zero
Pu-238	140	>2	>270	ROP = zero
Pu-239	250	17	4300	
Am-241	220	2	430	

DF-TUF: Decontamination factor through four units (CL, GF, RP, TUF)
DF-TUF: Decontamination factor across the RO
DF-TUF: Decontamination factor for the MTP

Table 6-11
Alpha Speciation Results (Rad)

Sample Point	Average Gross α (pCi/L)	Gross α Composite (pCi/L)	Gross α Sum (pCi/L)	U-234 (pCi/L)	U-235 (pCi/L)	U-238 (pCi/L)	Pu-238 (pCi/L)	Pu-239 (pCi/L)	Am-241 (pCi/L)
CLI	9,240	9,600	7,783	38	4.3	41	4,700	1,600	1,400
CLE	2,410	2,200	2,433	15	3.1	4.8	1,500	520	390
RPI	866	730	712	5.1	0.3	1.6	389	137	179
TFI	1,730	1,500	1,624	10	0.4	3.7	840	350	420
TFR	4,240	3,700	3,624	8.6	0.0	5.2	2,000	700	910
TFP	64	17	49	2.0	0.1	1.1	35	6.4	5.4
ROF	42	30	40	2.8	0.2	1.7	24	5.2	6.6
ROC	328	220	251	20	0.7	15	126	35	54
ROP	2	30	7	0.5	0.0	0.0	3.1	0.4	2.9

Table 6-12
Alpha Speciation Results (Chemical)

Isotope	Sp.Ac. (pCi/g)	Sample Point	Gross α Sum (ppt)	U-234 (ppt)	U-235 (ppt)	U-238 (ppt)	Pu-238 (ppq)	Pu-239 (ppq)	Am-241 (ppq)
U-234	6.19E+09	CLI	125,204	6	2,048	123,123	270	26,059	432
U-235	2.10E+06	CLE	15,902	2	1,476	14,414	86	8,469	120
U-238	3.33E+05	RPI	4,956	1	148	4,805	22	2,231	55
Pu-238	1.74E+13	TFI	11,304	2	186	11,111	48	5,700	130
Pu-239	6.14E+10	TFR	15,629	1	0	15,616	115	11,401	281
Am-241	3.24E+12	TFP	3,342	0	38	3,303	2	104	2
		ROF	5,187	0	81	5,105	1	85	2
		ROC	46,288	3	338	45,946	7	565	17
		ROP	0	0	0	0	0	6	1

ppt: parts per trillion, or nanograms per liter, or 10^{-9} g/L
ppq: parts per quadion, or picograms per liter, or 10^{-12} g/L

Figure 6-1
pH Concentrations

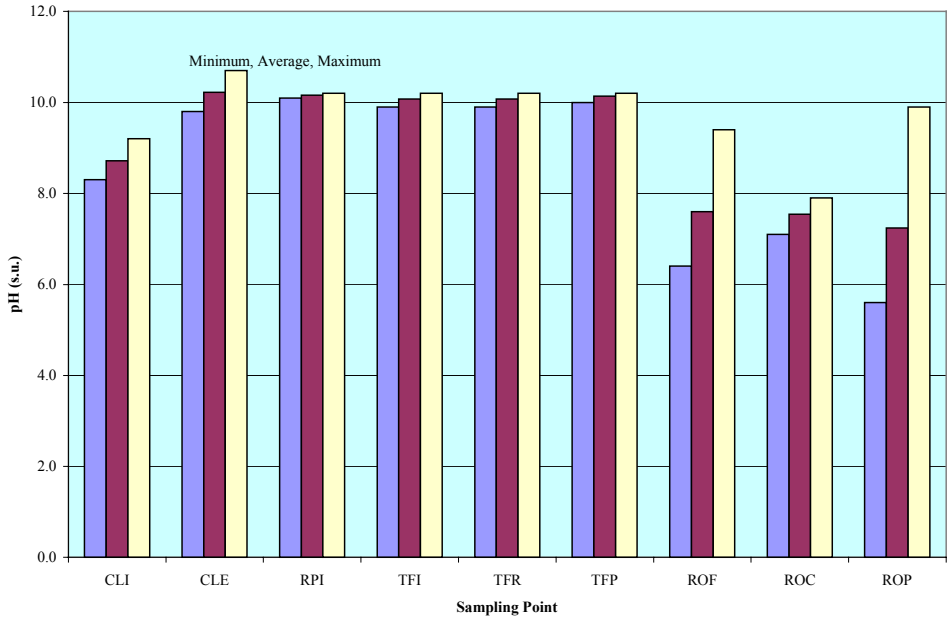

Figure 6-2
Total Alkalinity

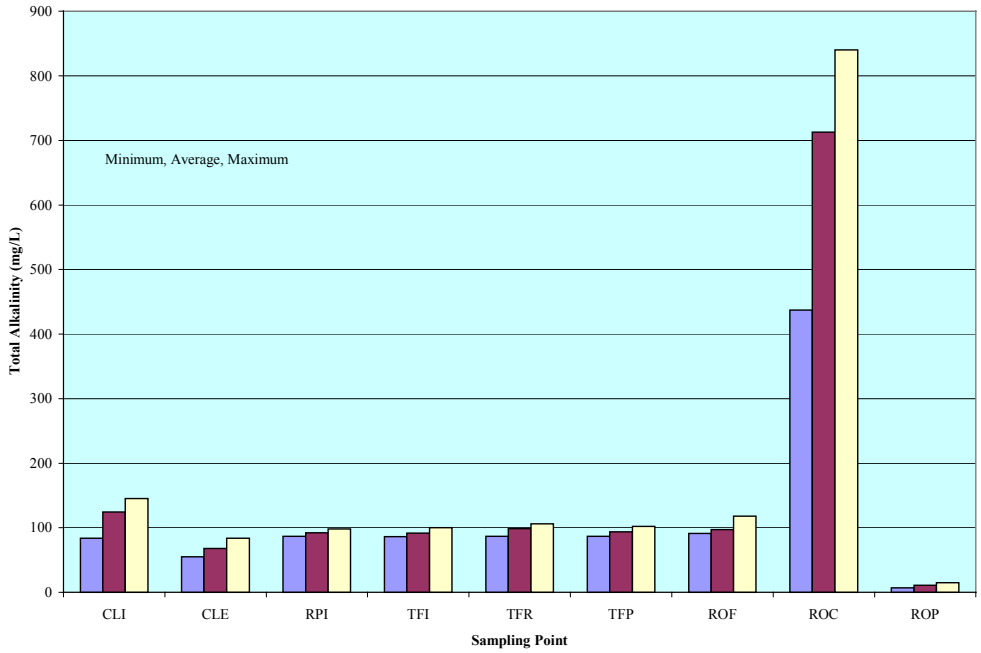

Figure 6-3
Chemical Oxidation Demand

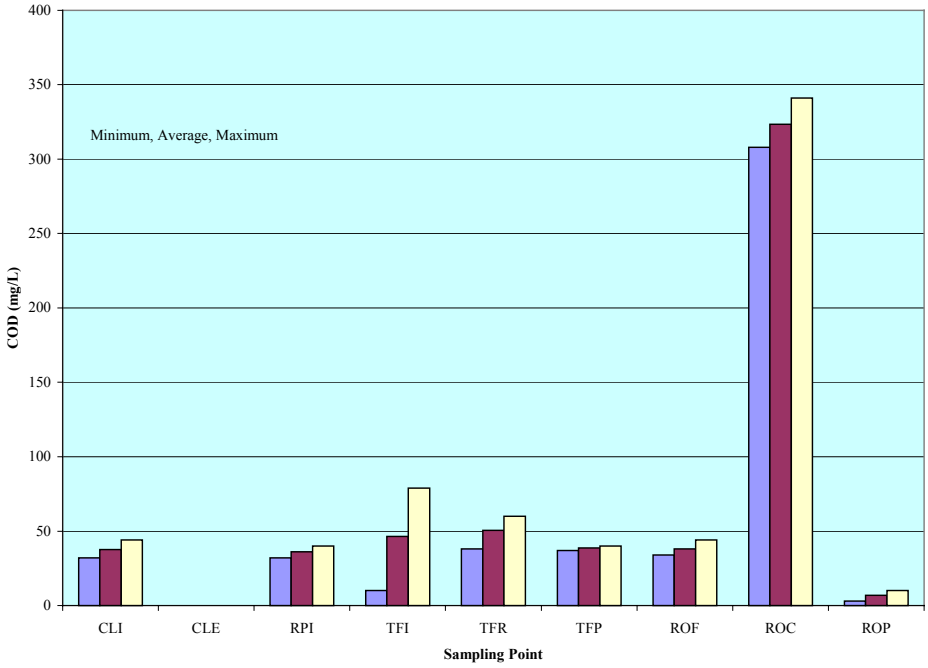

Figure 6-4
Total Suspended Solids

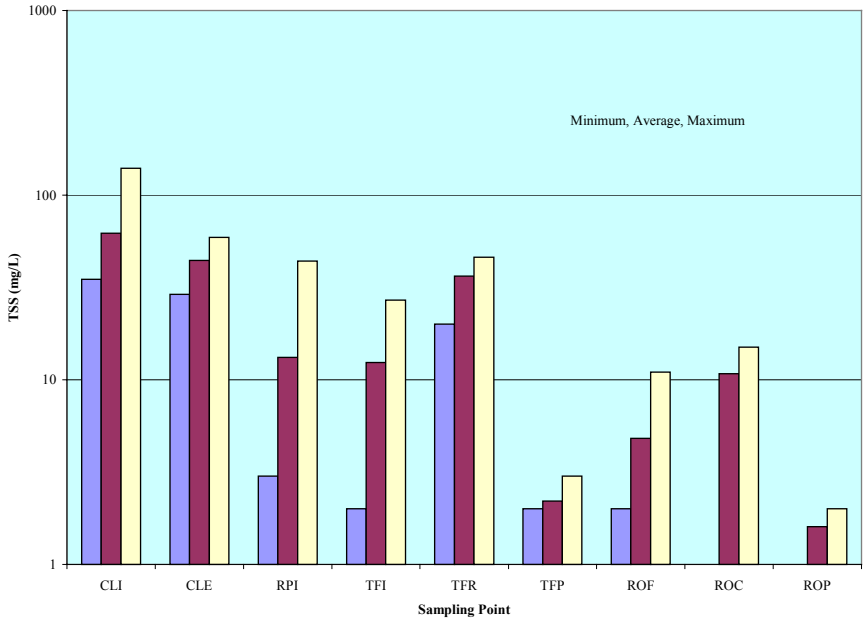

Figure 6-5
Total Dissolved Solids

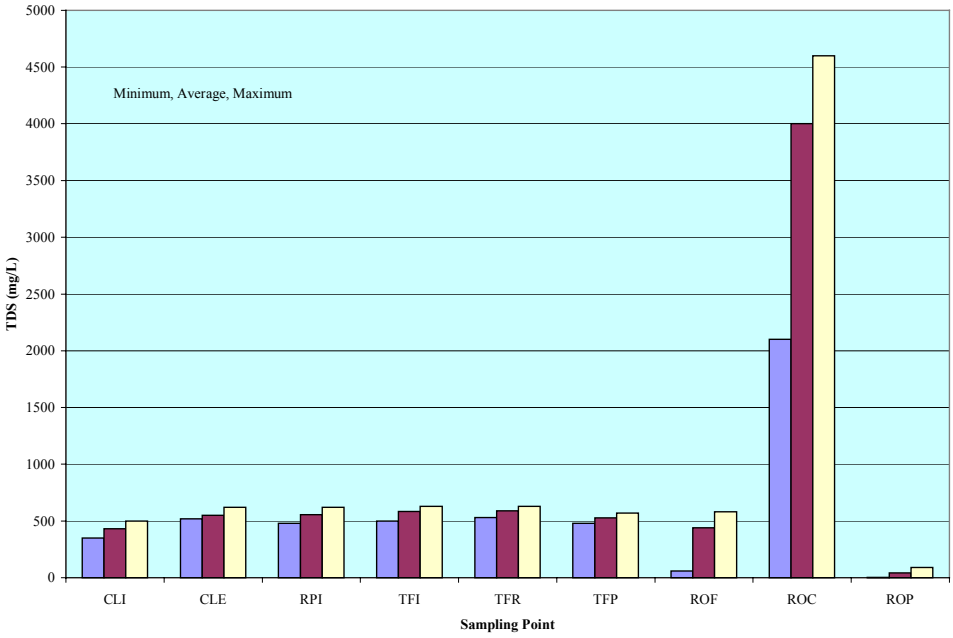

Figure 6-6
Ammonia

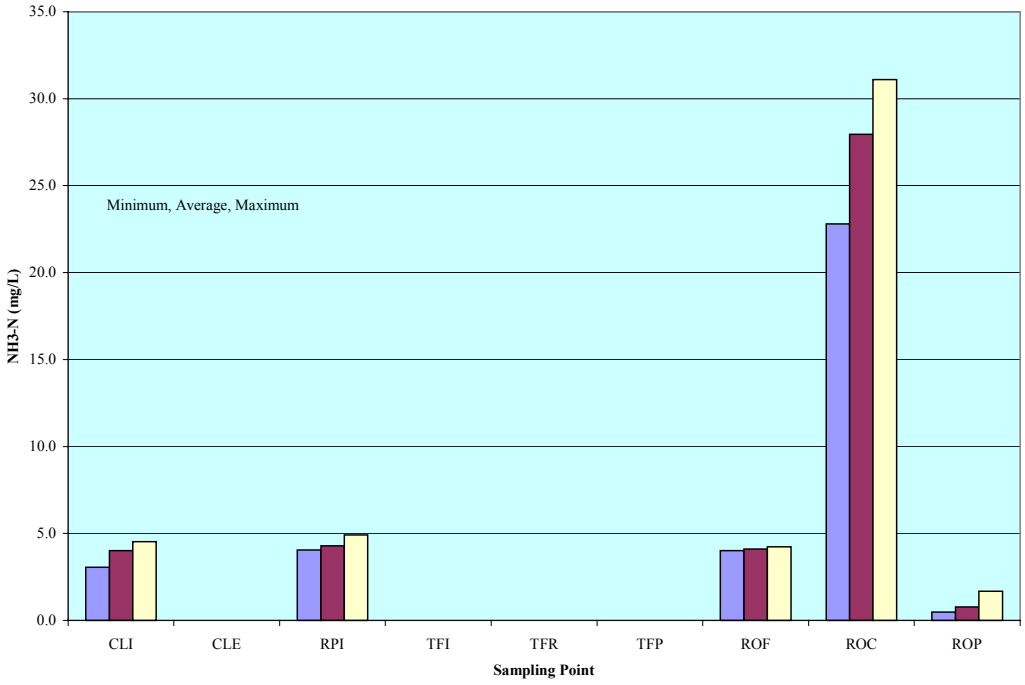

Figure 6-7
Arsenic and Copper

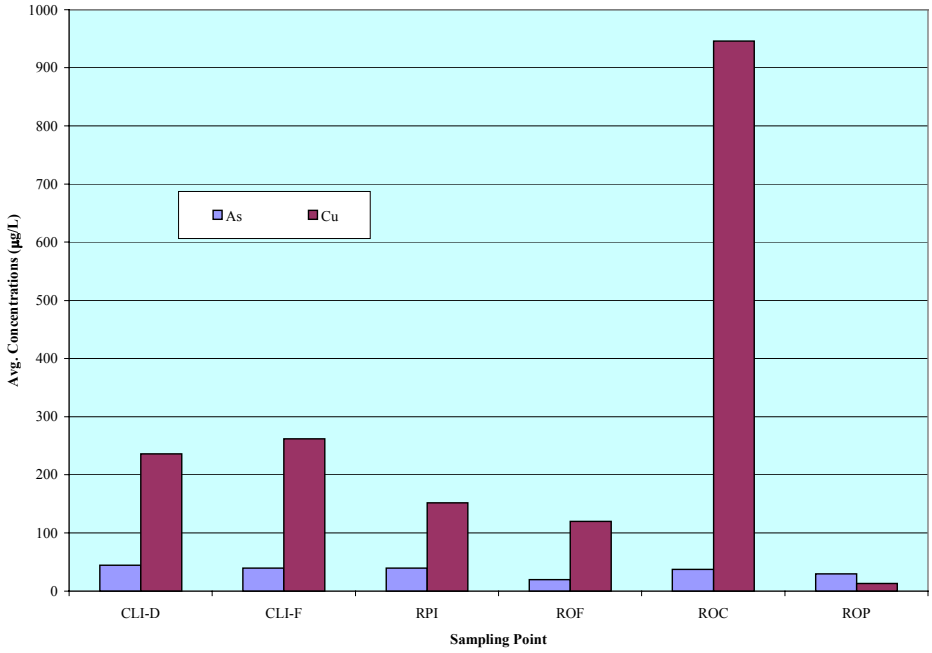

Figure 6-8
Iron, Magnesium, and Manganese

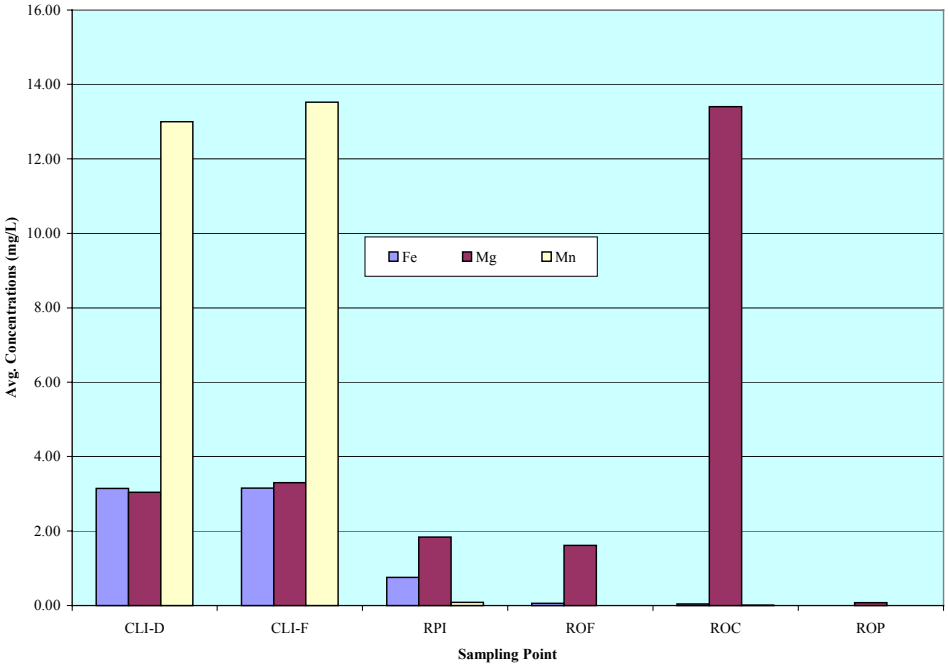

Figure 6-9
Calcium and Silicon

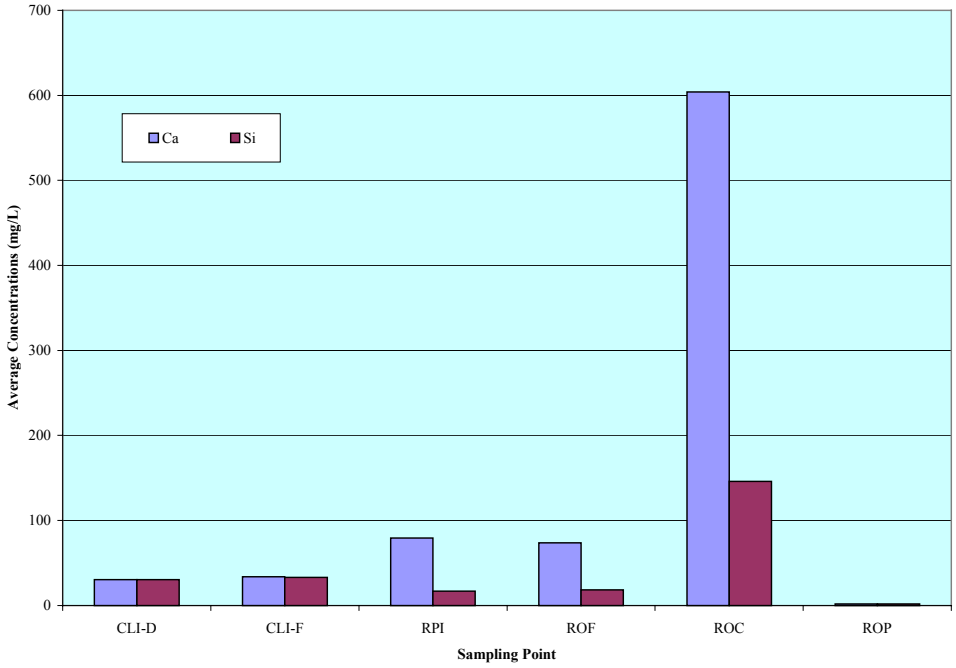

Figure 6-10
Mercury

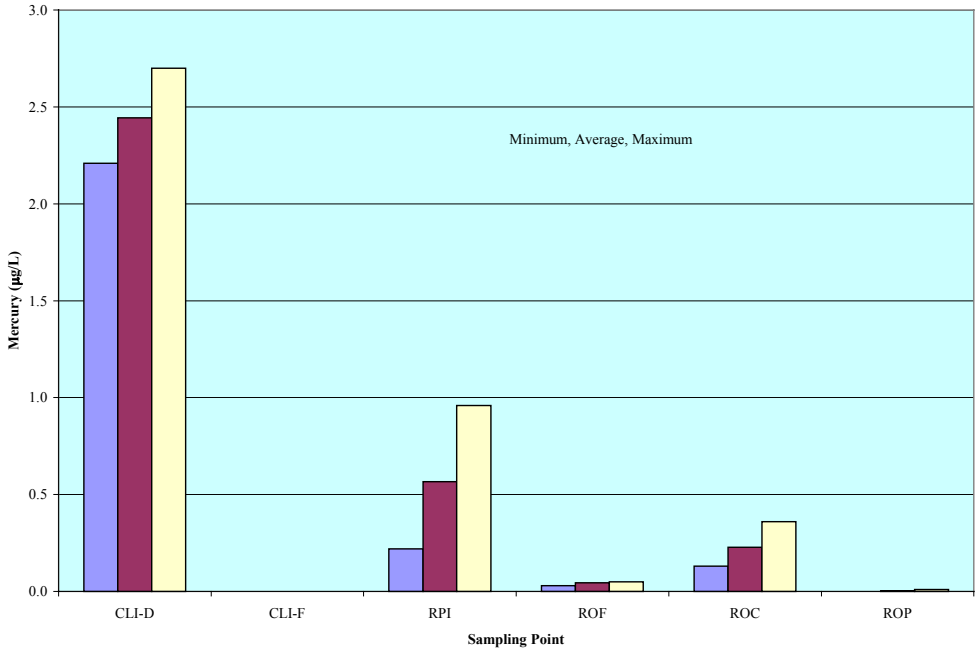

Figure 6-11
Potassium and Sodium

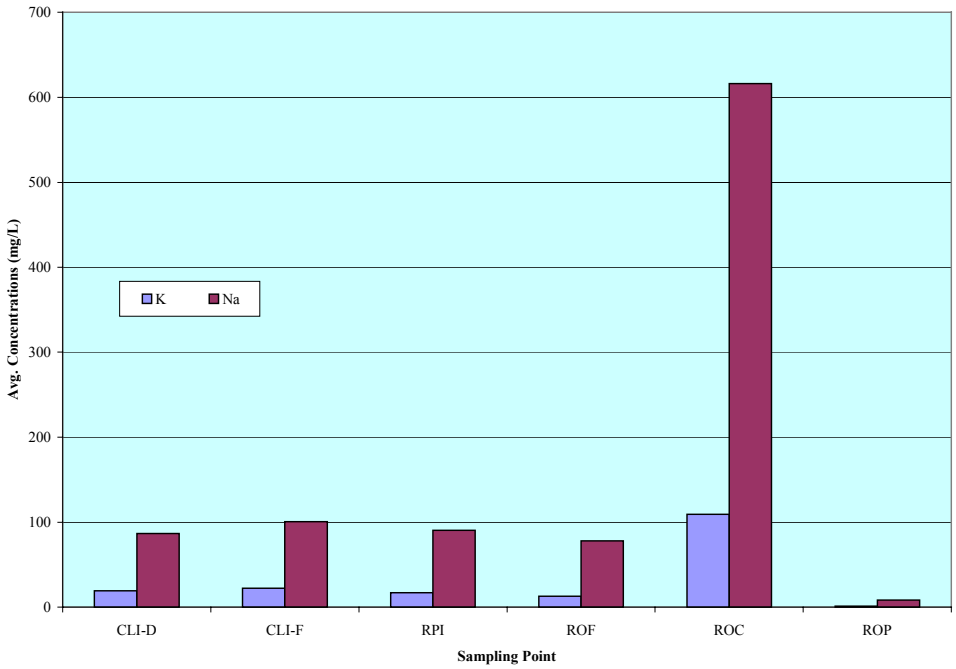

Figure 6-12
Aluminum, Nickel, and Zinc

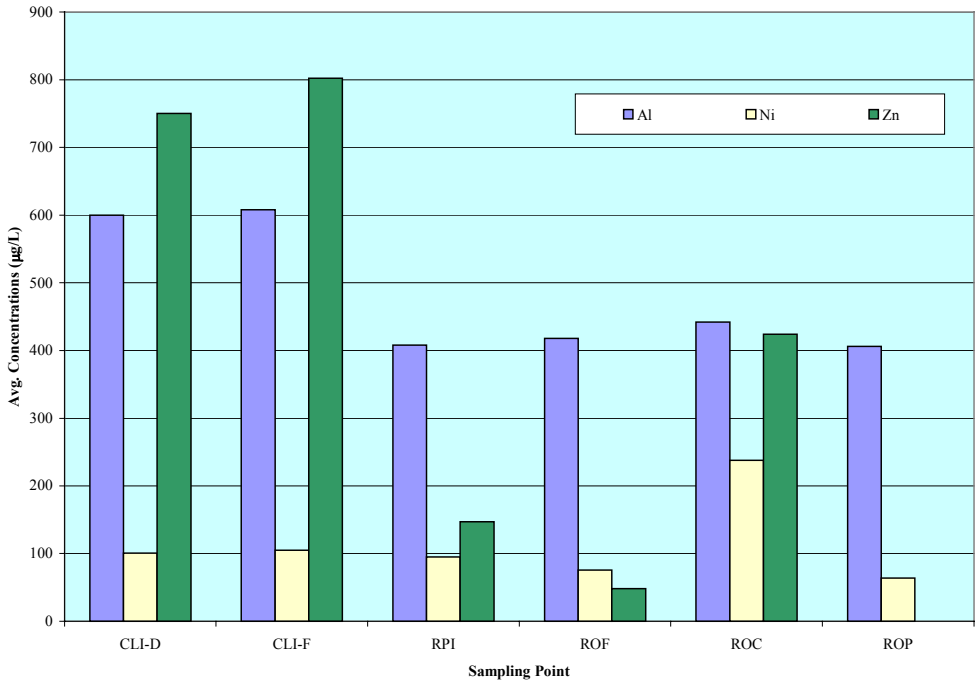

Figure 6-13
Boron, Molybdenum, Tin, and Strontium

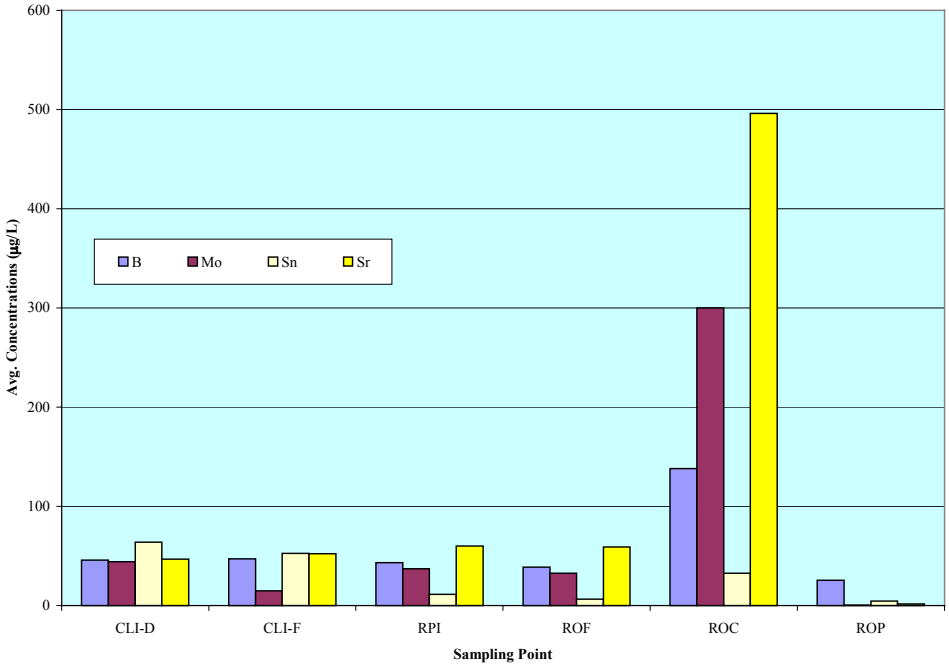

Figure 6-14
Barium and Beryllium

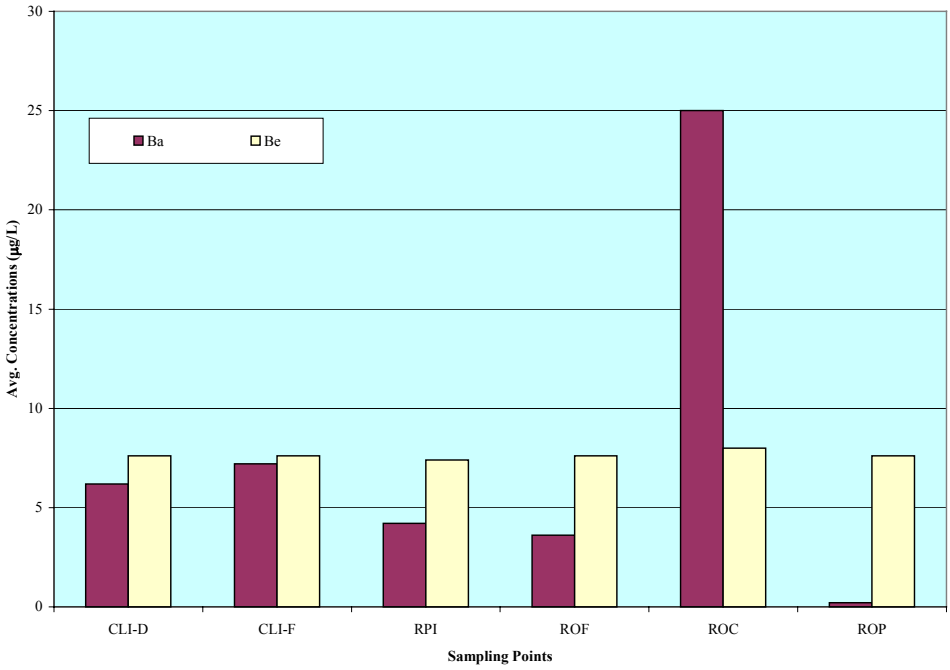

Figure 6-15
Selenium, Titanium, and Vanadium

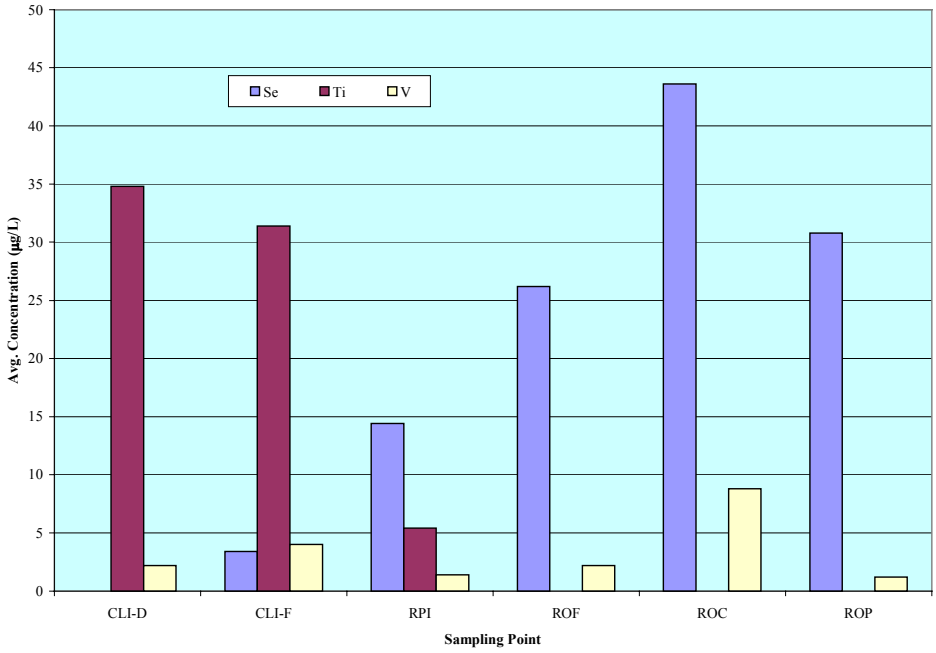

Figure 6-16
Lithium and Silver

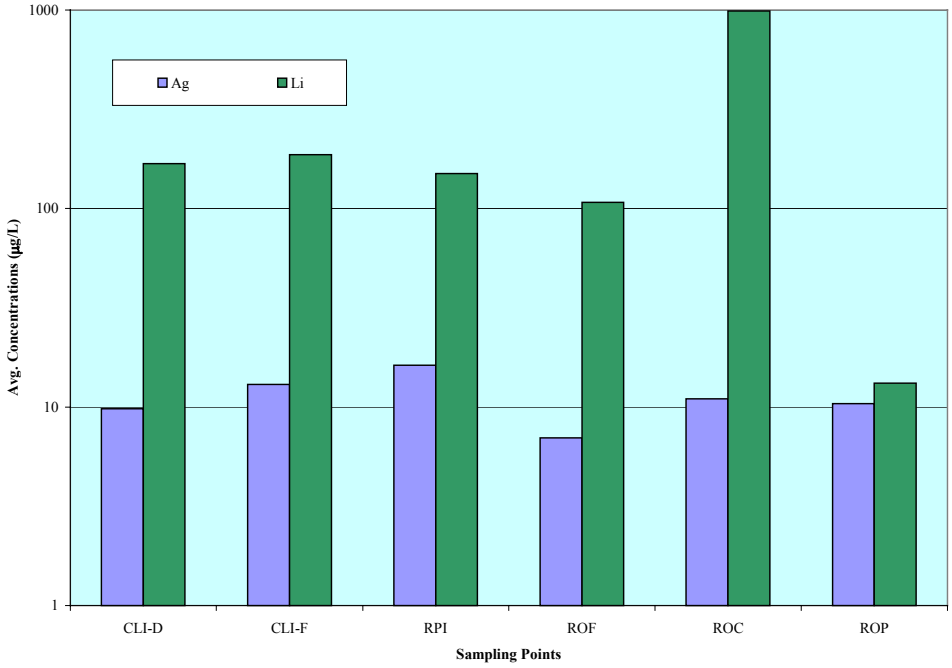

Figure 6-17
Chloride and Sulfate

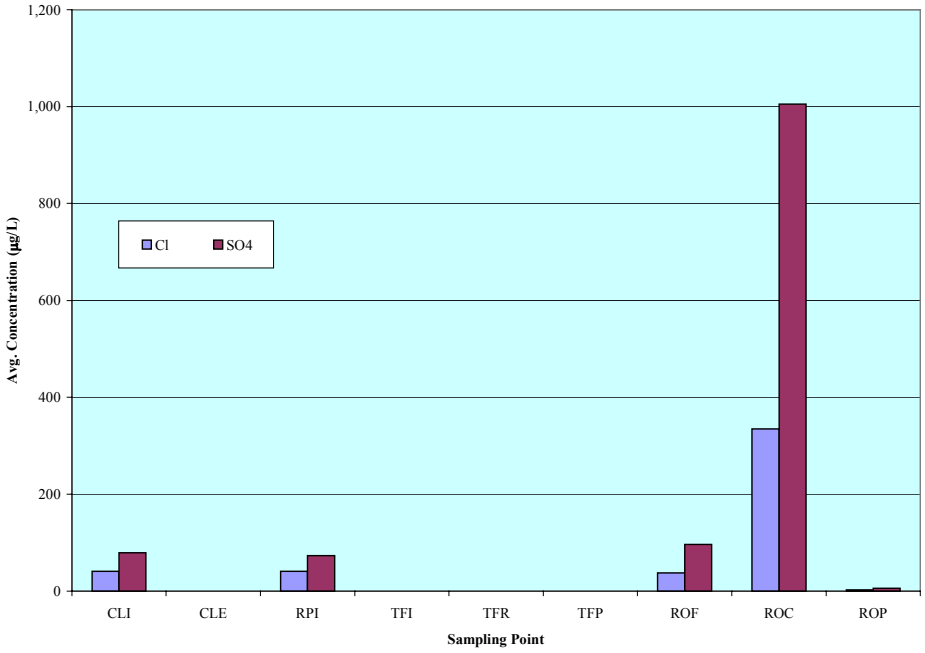

Figure 6-18
Fluoride and Perchlorate

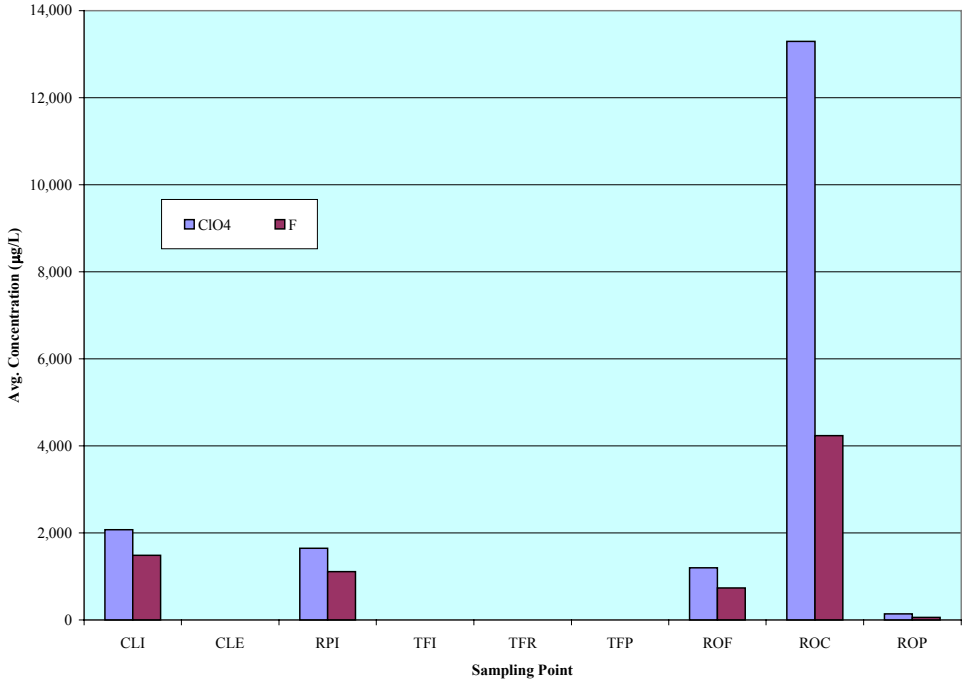

Figure 6-19
Nitrate Concentrations

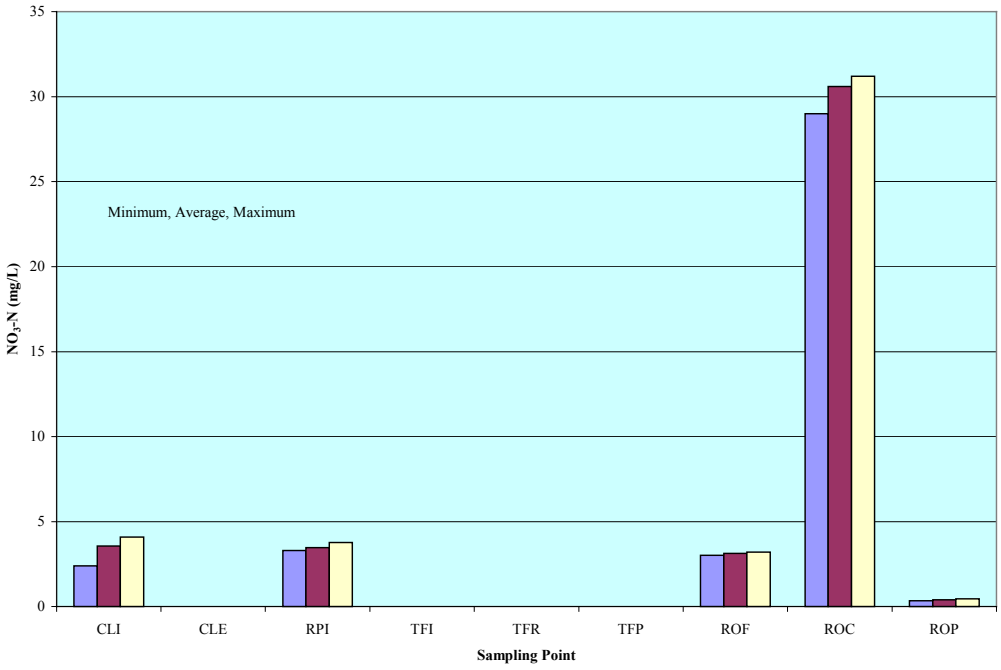

Figure 6-20
Gross Alpha

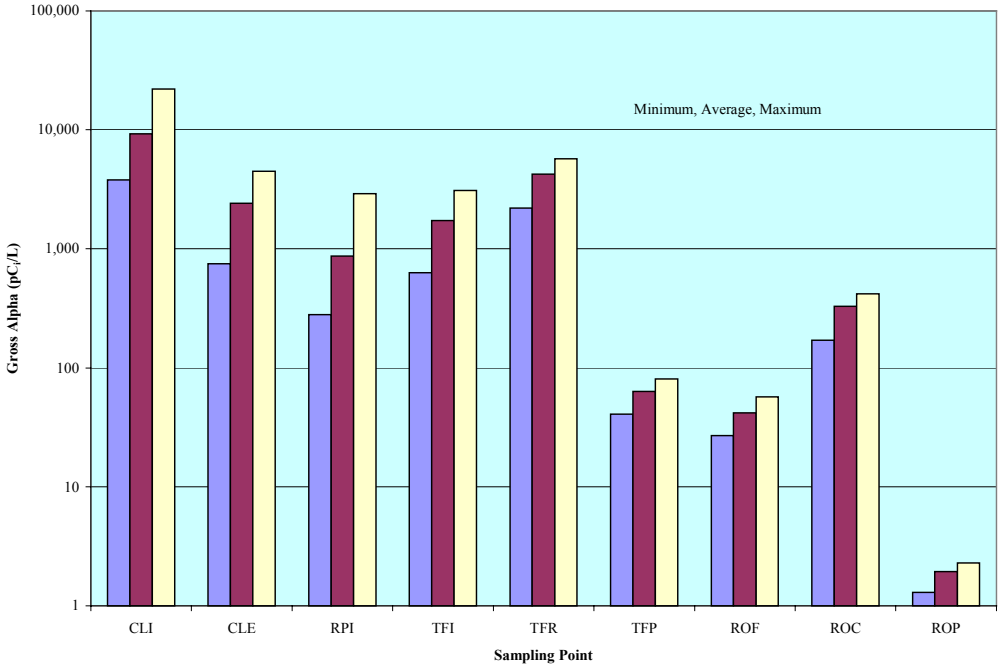

Figure 6-21
Gross Beta

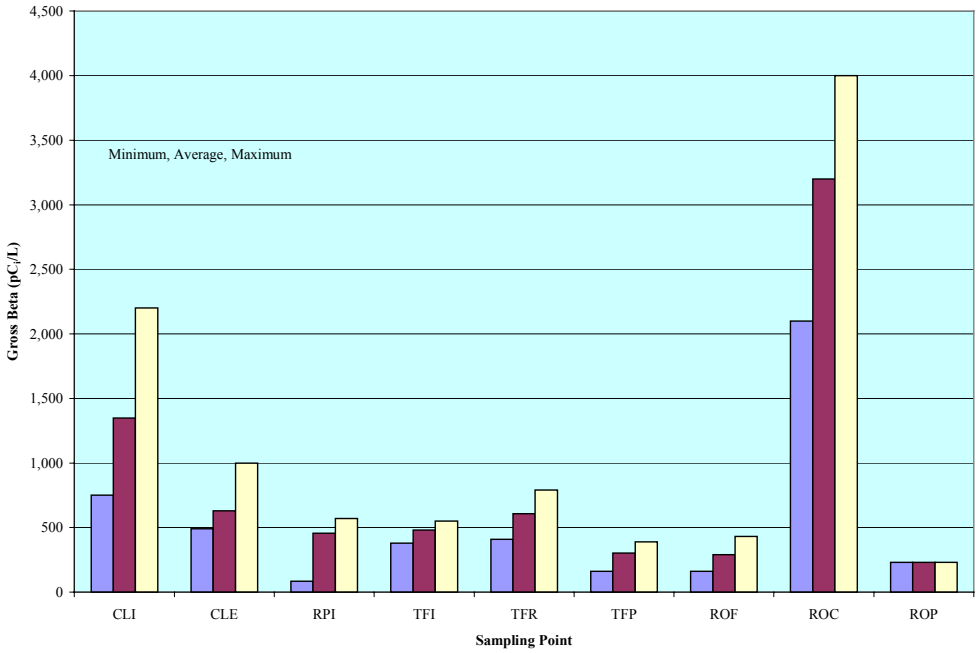

Figure 6-22
Tritium Concentrations

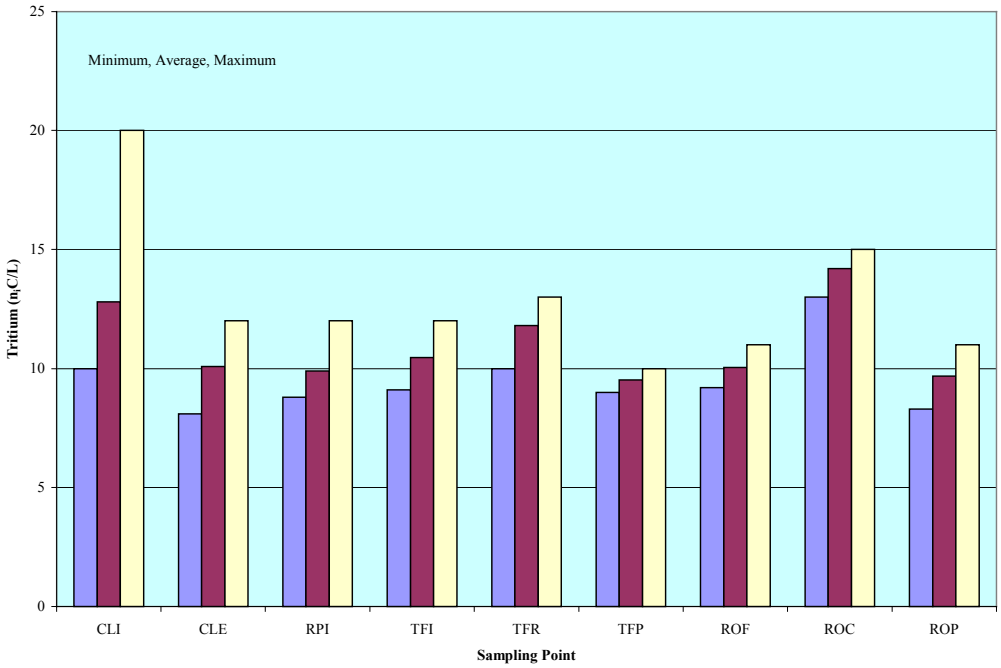

7.0 Material Balances

The report describing Plant Test 2000 contained a chapter devoted to material balances for each parameter at each unit operation. Results were summarized in the appendix to that report (Del Signore et al, August 2000).

It was intended to do the same for Plant Test 2001. Creating materials balances for this report is impractical, however, due to the appearance of 6200 - 9500 gallons of mystery waters. Without knowing the sources of these waters, flows are unknown and concentrations are likely to be imprecise. The multiplication of these two, to determine material balances, would both enlarge the uncertainty and introduce guesswork.

Material balances could be performed around the reverse osmosis unit since accurate flows were obtained for the three process streams (feed, concentrate, and permeate) that enter and exit the unit. A balance on one of five unit operations has limited value, however, since the same information can be obtained for the RO simply by studying the analytical results presented in the preceding chapter.

Accordingly, material balances are not included in this report for Plant Test 2001.

8.0 Conclusions

When evaluating sample results and other information gathered during Plant Test 2001, it is important to remember that the data has several qualifiers. First, results are from the equivalent of but a single day of operation. Second, operations were atypical in that the MTP was fed a homogenous batch of influent, and that recycle streams such as EDR product were side streamed instead of being returned to the headworks. Third, flows could not be determined; 6200 - 9500 gallons of water that could not be accounted for mysteriously appeared. Nonetheless, there are a number of powerful conclusions and recommendations that can be drawn from the test.

8.1 Preoxidation and Aging

The Secondary Stream Study pointed out that all DOE sites that treat radioactive liquid waste *except* LANL have multiple feed preparation steps (Del Signore et al, September 2000, p.13). That study went on to recommend that the TA-50 RLWTF install additional influent storage capacity to allow aging, the preparation of homogenous feed batches, and the characterization of those batches. It also recommended oxidation using potassium permanganate to enhance microflocculation and to push americium and plutonium into higher, less soluble, valence states.

Plant Test 2001 implemented all of these recommendations. A single batch of feed was prepared; that batch was pretreated with potassium permanganate at 75 mg/L; and the batch was allowed to age for seven days before being processed through the MTP.

The result was astonishing. Concentrations of gross alpha and gross beta were reduced by factors of 52 and 72, respectively, *before the influent was even fed to the clarifier*. Clearly, feed preparation should be pursued as a permanent improvement at the RLWTF.

8.2 Mystery Waters

A volume of water between 6200 and 9500 gallons “appeared” in the Main Treatment Plant during the processing of the 40,000 gallons of influent. Investigation into this mystery included the estimation of flows for individual unit operations using up to seven different calculation methods. Two flow balances were also attempted of the entire TA-50 RLWTF. None of these efforts revealed the source of the mystery waters.

In addition, evidence of unknown waters has continued during the months since Plant Test 2001. In January 2002, for example, approximately 75,000 gallons of unexplained waters appeared in the MTP (Del Signore, 03/04/02). In February 2002, another 55,000 gallons appeared (Del Signore, 03/21/02).

Information gathered since Plant Test 2001 has identified one of the sources of this mystery water: sinks and floor from first floor laboratories. These have not been quantified, however. Other, as-yet-unidentified sources are also likely to exist. The identification, quantification, and control of these water sources should receive a high priority.

8.3 Water Inventory

Plant Test 2001 established that the MTP has a storage capacity of 62,000 gallons of water. The inventory exists in the clarifier (28,000 gallons), the gravity filter (4800 gallons), and three 10,000-gallon tanks associated with the tubular ultrafilter. This large inventory is equivalent to about 12 days of operations at current LANL generation rates. The reason for the over-sized equipment is historical. The clarifier and gravity filter were installed in 1963 when RLW generation rates were much higher than today. The TUF was installed in 1999 when flows were about twice those experienced today.

This large inventory can present problems during plant tests. For example, the batch of influent prepared for Plant Test 2001 totaled just 40,000 gallons. Extraordinary efforts had to be taken to avoid having this batch "swallowed" by the larger MTP inventory of process waters. Specifically, about 30,000 gallons of process waters were drained to the 75K tank, thereby halving the MTP inventory, in order to minimize cross-mixing of the special influent batch with in-place process waters. Similar efforts will be required during future plant tests.

More importantly, however, this large inventory of process waters can worsen problems created by process upsets. Fresh influent to the MTP can hold unwelcome surprises such as detergents, high tritium concentrations, high gross alpha concentrations, and/or high nitrate concentrations. Such problem waters quickly mix with and cross-contaminate in-place process inventory, beginning with the 28,000 gallons in the clarifier. What may have been a small slug of problem influent thus expands to include a much larger volume of RLW, the recovery of which can require significant or extensive re-processing, and/or can require operation of the reverse osmosis unit.

8.4 Radioactivity Reduction

Unlike Plant Test 2000, TUF permeate did not meet DOE discharge standards for radioactivity during Plant Test 2001. Average gross alpha radioactivity in TUF permeate was 64 pC_i/L, versus the DOE standard of 30 pC_i/L. Rad removal was three times better, however. Decontamination factors through the TUF were 2200 for gross alpha and 87 for gross beta during Plant Test 2000 (Del Signore et al, August 2000, p.23). Based upon estimated concentrations in the 100,000-gallon tank, Plant Test 2001 reduced gross alpha from 482 nC_i/L in the 100,000-gallon tank to just 64 pC_i/L in TUF permeate, a decontamination factor of 7,500. Gross beta was reduced from 93 nC_i/L in the 100,000-gallon tank to 302 pC_i/L in TUF permeate, a decontamination factor of 308. This tripling of plant performance can largely be attributed to pre-oxidation and influent aging.

8.5 Isotope Chemistry

Alpha speciation data was garnered during Plant Test 2001. This data showed that, as would be expected, individual radioisotopes of uranium, plutonium, and americium behave similarly in the MTP. Specifically, decontamination factors of 140, 250, and 220 were achieved through the TUF for the isotopes ^{238}Pu, ^{239}Pu, and ^{241}Am, respectively. This finding is not surprising in light of the chemical similarities of these elements and isotopes.

8.6 Treatment Synopsis

The test showed that the Main Treatment Plant can be broadly viewed as a two-step process. The first four unit operations – clarifier, gravity filter, RP filter, and the TUF – worked to remove more than 20 multivalent metals, multivalent radioactive species, silica, and total suspended solids. The list of multivalent radioactive species included ^{238}Pu, ^{239}Pu, and ^{241}Am, which are the three most pervasive alpha emitters at the RLWTF. Treatment of these impurities through the TUF achieved decontamination factors that ranged from a low of about two (silica and several metals) to a high in excess of 200 (plutonium and americium).

All but three of the remaining impurities were largely unaffected by the first four unit operations. These included metals with a valence state of +1 (sodium, potassium, silver, and lithium), metals that may bind with oxygen and be present with a valence state of -1 (boron and selenium), anions with a valence state of -1 (chloride, perchlorate, and nitrate), and several conventional parameters (ammonia, COD, conductivity, and TDS). Monovalent radioactive species such as rubidium and cesium also fall into this category of impurities. The decontamination factor for these impurities all approximated 1.0 through the TUF. Removal depended solely upon by the RO, where a decontamination factor of about ten was achieved for most.

Lastly, three impurities behaved differently in the MTP than might be anticipated. Calcium (DF of 0.4) and sulfate (DF of 0.8) concentrations actually increased though the first four unit operations. This behavior, however, is due to the addition of lime and ferric sulfate at the clarifier. Fluoride has a valence state of -1, and should be unaffected by the first four unit operations. In contrast to this, however, a DF of 2.0 was achieved through the TUF. This behavior results from the formation of CaF_2 in the clarifier. Calcium fluoride has a solubility of just 15 mg/L in water at 18°C (Merck, 1989, p.2536), and precipitates as part of clarifier sludge.

9. Recommendations

1. Plant-wide tests should be continued annually. Plant Test 2000 led to process improvements such as routine sampling of TUF permeate, operation of the RO at higher recovery rates, and use of gravity filter effluent for dissolution of clarifier chemicals. Plant Test 2001 confirmed the enormous potential benefits of pre-oxidation and influent aging; discovered for the first time that unidentified waters are being introduced into the MTP (a discovery since confirmed many times over); and provided just the second set of comprehensive treatment data for more than 40 water-quality parameters. The benefits from these tests are many and obvious.

2. Plans to install additional influent storage capacity through the Cerro Grande Rehabilitation Project should be brought to fruition. This capacity will allow for the preparation and characterization of homogenous feed batches and for influent aging.

3. Permanganate pre-oxidation should be made a permanent operation. This treatment step is currently being performed by process engineers on an irregular basis. Instead of permanganate being continuously and automatically added as influent enters the RLWTF, lump quantities of permanganate are sometimes added to the influent tanks, a less efficient and less effective method of chemical addition and mixing. In addition, permanganate is currently being added at less-than-optimal concentrations to reduce the frequency and need to pay attention to this operation. (See Recommendation #4).

4. The rate of permanganate addition should be increased. Permanganate is currently being added at 20-25 mg/L; Plant Test 2001 showed dramatic results at 75 mg/L; other data hints that gross alpha concentrations can be pushed to nearly zero simply by increasing the permanganate dose. Bench scale tests should be performed to establish the relationship between rate of permanganate addition and post-treatment gross alpha concentrations. The plant dose rate should then be adjusted to yield optimal MTP performance.

5. An organized engineering project should be launched to identify and quantify the mystery waters that enter the MTP daily. This project should include the purchase and installation of flow meters that are monitored by the plant process control system.

6. As part of the next plant-wide test, sampling for carbonate and bicarbonate should be preformed, and nitrogen sampling should be expanded. (a) Conversion of bicarbonate to carbonate occurs in the clarifier along with precipitation of calcium carbonate. Additions of carbonate and bicarbonate occur in TK-9 when carbon dioxide is used to lower the pH of TUF permeate. This re-addition of carbonate and bicarbonate ions affects operations at the EDR and the interim evaporator. (b) There are hints that state regulators are becoming more interested in total nitrogen discharged to Mortandad Canyon, not just nitrogen in the form of nitrates. To collect information about total nitrogen, sampling would need to be expanded to include analysis for total Kjedahl nitrogen and nitrite (NO_2-N) in addition to analysis for ammonia (NH_3-N) and nitrate (NO_3-N).

10.0 References

CRC Press, Inc., 1989. "CRC Handbook of Chemistry and Physics", 70th Edition, Boca Raton, FL.

Del Signore, 03/04/02. "Monthly Reports for January 2002 (Final)", Los Alamos, NM.

Del Signore, 03/21/02. "Monthly Reports for February 2002 (Preliminary)", Los Alamos, NM.

Del Signore et al, August 2000. "Radioactive Liquid Waste Treatment Facility Plant Test Conducted May 2000", LA-UR-00-4333, Los Alamos, NM.

Del Signore et al, September 2000. "Radioactive Liquid Waste Treatment Facility Secondary Stream Study", LA-UR-00-4332, Los Alamos, NM.

Merck & Co., Inc., 1989. "The Merck Index", Eleventh Edition, Rahway, NJ.

Appendix A – Flows

Contents

A.1 Plant Conditions A-3
A.2 Process Streams A-3
A.3 Methods Used To Estimate Flows A-6

A.4 Clarifier A-7
A.4.1 Raw Daily Feed (RDF) A-7
A.4.2 Chemical Quantities and Concentrations A-8
A.4.3 Tap Water Used to Dissolve Chemicals A-9
A.4.4 Gravity Filter Recycle (GFR) A-9
A.4.5 Pump Seal Water A-9
A.4.6 Clarifier Influent (CLI) A-9
A.4.6 Clarifier Sludge A-9
A.4.7 Clarifier Effluent (CLE) A-10

A.5 Gravity Filter A-10
A.6 RP Filter A-10

A.7 Tubular Ultrafilter A-10
A.7.1 TUF Concentrate (TFC) A-11
A.7.2 TK-72 Overflow and TK-72 Underflow (TFR) A-12
A.7.3 TK-71 Effluent (TFI) A-13
A.7.4 TUF Permeate (TFP) A-13
A.7.5 Concentrate Purge A-14

A.8 Reverse Osmosis A-15
A.8.1 RO Feed (ROF) A-15
A.8.2 RO Concentrate (ROC) A-16
A.8.3 RO Permeate (ROP) A-17

A.9 Flush Solutions A-18

A.10 Unit Operations Flow Summary A-19
A.11 One-Day Water Balance A-24
A.12 Two-Day Water Balance A-25

Appendix A – Flows

List of Tables

A-1 Process Streams for MTP Unit Operations A-3
A-2 Tank Levels (%) During Plant Test 2001 ..... A-4
A-3 Tank Levels (gallons) During Plant Test 2001 ..... A-5
A-4 Estimating RDF for 04/25/01 From the G2 Flow Chart A-7
A-5 Estimating TFC for 04/25/01 From the G2 Flow Chart A-12
A-6 Estimating TFP for 04/25/01 From the G2 Flow Chart A-14
A-7 Estimating ROP for 04/25/01 From the G2 Flow Chart A-17
A-8 Membrane Flush Solution Volumes, 04/24/01 and 04/25/01 ..... A-18
A-9 Summary of Unit Operation Flow Estimates A-20

List of Figures

A-1 Average Flow Rates for the Clarifier, Gravity Filter, and RP Filter on 04/25/01 ....A-21
A-2 Average Flow Rates for the Tubular Ultrafilter on 04/25/01 ....A-22
A-3 Average Flow Rates for Reverse Osmosis on 04/25/01 ....A-22
A-4 Flows (Total) on 04/25/01 ....A-23
A-5 One-Day Overall Water Balance (04/25/01) A-26
A-6 Two-Day Overall Water Balance (04/24 & 04/25) A-26

A1. Plant Conditions

On Wednesday, 04/25/01, operations were as follows:

- The clarifier, gravity filter, and RP filter were each operated a total of 410 minutes, from 10:25 AM to 17:15 PM.
- The TUF was operated twice, from 08:15 – 10:00 AM, and then from 11:40 AM to 17:15 PM, for a total of 440 minutes.
- The RO was operated for 335 minutes, from 11:40 AM to 17:15 PM.

In order to have a controlled test, raw daily feed to the clarifier consisted solely of a prepared batch of influent from the 100,000-gallon tank. The batch waters were transferred from the 100K tank to the 17K tank, and then fed to the clarifier. In addition, the two largest MTP secondary waste streams typically recycled to the headworks were directed elsewhere. (a) RO concentrate was transferred directly to the tank farm, rather than being processed through the EDR unit. This eliminated recycle of EDR product to the headworks. (b) The daily purge of TUF concentrate was sent to the 75K tank rather than to the 17K tank.

Tap (industrial) water was used to prepare chemicals for addition to the clarifier for about two hours in the morning due to mechanical problems with the pump used to recycle gravity filter effluent. Thereafter, gravity filter effluent was used to dissolve the lime and ferric sulfate. Sodium hydroxide was not added to the clarifier.

Changes in tank volume, which are often used to estimate flows, are detailed below in Tables A-2 and A-3.

A2. Process Streams

Flows were estimated for process streams into and out of each of the five MTP unit operations (a total of 17 streams) as summarized in Table A-1 below. Flows were estimated as both daily totals (gallons) and as flow rates (gallons per minute, or gpm).

Table A-1
Process Streams for MTP Unit Operations

Unit Operation	Figure	Streams In	Streams Out
Clarifier	A-1	Raw daily feed (RDF), Tap Water for Chemicals, Seal Water, GFE	Clarifier Effluent (CLE), Sludge
Gravity Filter	A-2	Gravity Filter Effluent (GFI)	Gravity Filter Recycle (GFR), Gravity Filter Effluent (GFE)
RP Filter	A-3	RP Influent (RPI)	RP Effluent (RPE)
TUF	A-4	TUF Influent (TFI)	TUF Concentrate (TFC), TUF Permeate (TFP)
RO	A-5	RO Feed (ROF)	RO Concentrate (ROC), RO Permeate (ROP)

Table A-2
Tank Levels (%) During Plant Test 2001

	Unit	Capacity	04/23 2359	04/24 0800	04/24 1000	04/24 1200	04/24 1700	04/24 2359	04/25 0800	04/25 1700	04/25 2359
Head Works (%):											
	100K	100,000	40%	40%	27%	27%	21%	21%	21%	0%	0%
	75K	75,000	22%	26%	34%	43%	48%	54%	59%	67%	57%
	17K	17,000	9%	9%	99%	84%	31%	31%	31%	2%	69%
		192,000									
MTP (%):											
	Clarifier	28,000	100%	100%	80%	100%	100%	100%	100%	100%	100%
	Gravity Filter	4,800	100%	100%	100%	100%	100%	100%	100%	100%	100%
	TK-71	10,000	76%	76%	76%	18%	58%	58%	58%	59%	59%
	TK-72	10,000	99%	99%	6%	24%	78%	78%	78%	77%	77%
	TK-09	10,000	66%	66%	2%	27%	6%	6%	6%	61%	61%
		62,800									
Effluent (%):											
	Frac-N	19,400	100%	100%	100%	100%	0%	0%	0%	100%	100%
	Frac-S	19,400	40%	40%	60%	79%	79%	79%	79%	100%	97%
	Eff-N	25,000	34%	34%	34%	34%	34%	34%	34%	34%	34%
	Eff-S	25,000	44%	44%	44%	44%	44%	44%	44%	44%	44%
		88,800									
Other (%):											
	TK-08	8,000	0%	0%	0%	0%	0%	0%	0%	0%	0%
	TK-73	3,700	99%	99%	99%	99%	99%	99%	99%	100%	100%
	TK-74	900	78%	78%	45%	45%	74%	74%	74%	56%	56%
	Sludge	28,000	60%	60%	83%	83%	83%	83%	83%	84%	84%
		40,600									

Table A-3
Tank Levels (gallons) During Plant Test 2001

	Unit	Capacity	04/23 2359	04/24 0800	04/24 1000	04/24 1200	04/24 1700	04/24 2359	04/25 0800	04/25 1700	04/25 2359
Head Works (gal):											
	100K	100,000	40,200	40,200	27,400	27,400	20,900	20,900	20,900	0	0
	75K	75,000	16,350	19,500	25,500	32,250	36,000	40,500	44,250	50,250	42,750
	17K	17,000	750	750	16,970	15,250	3,270	3,270	3,270	80	12,510
		192,000	57,300	60,450	69,870	74,900	60,170	64,670	68,420	50,330	55,260
MTP (gal):											
	Clarifier	28,000	28,000	28,000	22,400	28,000	28,000	28,000	28,000	28,000	28,000
	Gravity Filter	4,800	4,800	4,800	4,800	4,800	4,800	4,800	4,800	4,800	4,800
	TK-71	10,000	7,600	7,600	7,600	1,800	5,800	5,800	5,800	5,900	5,900
	TK-72	10,000	9,900	9,900	600	2,400	7,800	7,800	7,800	7,700	7,700
	TK-09	10,000	6,600	6,600	200	2,700	600	600	600	6,100	6,100
		62,800	56,900	56,900	35,600	39,700	47,000	47,000	47,000	52,500	52,500
Effluent (gal):											
	Frac-N	19,400	19,400	19,400	19,400	19,400	0	0	0	19,400	19,400
	Frac-S	19,400	7,240	7,240	12,140	16,420	16,420	16,420	16,420	19,400	19,210
	Eff-N	25,000	8,500	8,500	8,500	8,500	8,500	8,500	8,500	8,500	8,500
	Eff-S	25,000	11,000	11,000	11,000	11,000	11,000	11,000	11,000	11,000	11,000
		88,800	46,140	46,140	51,040	55,320	35,920	35,920	35,920	58,300	58,110
Other (gal):											
	TK-08	8,000	20	20	20	20	20	20	20	20	20
	TK-73	3,700	3,660	3,660	3,660	3,660	3,660	3,660	3,660	3,700	3,700
	TK-74	900	700	700	410	410	670	670	670	500	500
	Sludge	28,000	16,690	16,690	23,210	23,210	23,210	23,210	23,210	23,460	23,630
		40,600	21,070	21,070	27,300	27,300	27,560	27,560	27,560	27,680	27,850

A3. Methods Used To Estimate Flows

Seven different methods were used for measuring and/or estimating flows:

- Method A, Field Data: Samplers recorded flow rates when samples were collected, as shown in Table 4-2. Five sample sets were collected at the clarifier on Wednesday, 04/25, but flow rates were recorded only on the first four sampling events. Four sample sets were collected on 04/25 at the membrane unit operations, and flows were recorded each time. Therein lies the weakness of using this flow estimation method; there are only four data points for any given process stream.

- Method B, G2 Flow Charts: Some flow rates are continuously monitored, and then graphed by G2, the plant process control system. Flow rate data contained in the graphs can be integrated to arrive at weighted average flow rate. Examples are shown in several tables below. A weakness of this method lies in the lack of detail in the graphs; one must estimate both flows and flow duration, which introduces uncertainty. Nonetheless, for those process streams for which flow graphs are prepared, this is probably the most accurate of the six flow estimating methods.

- Method C, Daily Summary Flow Rates: The G2 process control system prints out a "Daily Summary" report for each day of operation. The Daily Summary reports average flow rate for some process streams.

- Method D, Daily Summary Flow Totals: The Daily Summary also reports total flow for the day for some process streams. This data can be divided by the operating time for the relevant unit operation on Wednesday, 04/25 (See Table 4-1.) to arrive at average flow rate.

- Method E, Changes in Tank Volumes: Some flow rates can be estimated by dividing the rise or drop in tank volume by the operating time for the relevant unit operation on Wednesday, 04/25. For example, RO permeate was added to the north and south frac tanks. The volume change for these tanks therefore should equal the total quantity of RO permeate generated on 04/25.

- Method F, Water Balance: Some flows are not metered or monitored (e.g., flows into and out of the gravity and RP filters, and must be calculated from other flows. Only one process stream per unit operation can be estimated using the water balance method, however.

- Method G, Process Knowledge: Several process streams have no flow meters, and no easy means of performing a mass balance. Process knowledge gained during Plant Test 2000 was used for these streams.

A.4 Clarifier

As shown in Figure A-1, four streams were fed into the clarifier – raw daily feed, chemicals (ferric sulfate hexahydrate and lime) dissolved in tap water, chemicals dissolved in gravity filter recycle waters, and pump seal water. Two streams leave the clarifier: clarifier effluent and sludge.

A.4.1 Raw Daily Feed (RDF)

Method A, Field Data: There were five clarifier sampling events on the afternoon of 04/25/01; RDF was recorded on four of those occasions as 46.5, 74.0, 58, and 58 gpm. These yield an average RDF flow rate of 59.1 gpm.

Method B, G2 Flow Chart: The G2 flow chart for clarifier feed for 04/25 provided two pieces of information. First, the clarifier operated from approximately 1025-1715 hours, for a total of 410 minutes or 6.83 hours. Second, clarifier feed rate varied considerably, from 50-75 gpm, and was changed 13 times during the day. Integration of the chart yields a time-weighted average RDF flow rate of 61.1 gpm, as shown Table A-4.

Table A-4
Estimating RDF for 04/25/01 From the G2 Flow Chart

Interval	Time	Min.	Avg. Flow (gpm)	Time-Weighted Flow
1	1025-1050	25	50	1,250
2	1050-1125	35	48	1,680
3	1125-1130	5	65	325
4	1130-1150	20	60	1,200
5	1150-1200	10	58	580
6	1200-1220	20	61	1,220
7	1220-1225	5	66	330
8	1225-1250	25	76	1,900
9	1250-1330	40	72	2,880
10	1330-1355	25	60	1,500
11	1355-1540	105	58	6,090
12	1540-1700	80	64	5,120
13	1700-1715	15	65	975
		410	61.1	25,050

Method C, Daily Summary Flow Rate: G2 reported an average of 65.07 liters per minute for "CL-2 Inlet Flow", which is RDF. It is assumed that the units are incorrect, and that the value reported is actually 65.1 gpm.

Method D, Daily Summary Flow Totals: G2 totalizer data for device #116-CLF-M2-2, the clarifier influent flow meter, for 04/25/01, was reported as 93,700 liters, which equates to 24,760 gallons. This yields an average flow rate for the day of (24,760 gal) ÷ (410 min) = 60.4 gpm

Method E, Changes in Tank Volumes: Levels in the 100K tank were 20.9% at 0800 hours on 04/25 and 0% at 1700 hours on 04/25, which means that 20,900 gallons were transferred into the 17K tank. In addition, volumes in the 17K tank were 31% prior to the first transfer from the 100K tank, and 4% when clarifier operations halted, for a net reduction of 27% or 3500 gallons. Total feed to the clarifier, therefore, was the sum of these two tank level changes, or 24,400 gallons during the day, for an average feed rate of (24,400 gallons) ÷ (410 minutes), or 59.5 gpm.

Value Selected: The five values are in good agreement. There is less confidence in values from Method A (only four data points) and Method C (questionable units), and the three remaining values range from 59.5 to 61.1 gpm. The middle value, 60.4 gpm, is selected, which yields a daily flow of 24,760 gallons as reported in the Daily Summary.

A.4.2 Chemical Quantities and Concentrations

Ferric sulfate hexahydrate [$Fe_2(SO_4)_3 \bullet 6H_2O$]: This compound was dissolved in either recycled gravity filter effluent or tap water, and the solution is then fed to the clarifier. This flow is not metered, but was estimated in Plant Test 2000 at three gallons per minute or 680 lph (Del Signore et al, August 2000, p.11). G2 records indicate that 8.4 kilograms of the hexahydrate were added on 04/25/01. Concentrations in solution fed to the clarifier can thus be estimated as follows:

Iron: (8.4 kg ferric sulfate) x (22 w/o Fe) = 1850 g Fe
(1850 g) ÷ (6.83 hrs) = 270 g/h
(270 g/h) ÷ (680 lph) = 0.40 g/l = 400 mg/l

Sulfate: (8.4 kg ferric sulfate) x (57 w/o SO_4) = 4750 g SO_4
(4750 g) ÷ (6.83 hrs) = 695 g/h
(695 g/h) ÷ (680 lph) = 1.02 g/l = 1020 mg/l

Lime [$Ca(OH)_2$]: This compound was also dissolved in either recycled gravity filter effluent or tap water, and the solution is then fed to the clarifier. This flow is not metered, but was estimated in Plant Test 2000 at three gallons per minute or 680 lph. G2 records indicate that 49.3 kilograms of lime were added on 04/25/01. Concentrations in solution fed to the clarifier can thus be estimated as follows:

Calcium: (49.3 kg lime) x (54 w/o Ca) = 26.6 kg Ca
(26,600 g) ÷ (6.83 hrs) = 3,890 g/h
(3,890 g/h) ÷ (680 lph) = 5.7 g/l

A.4.3 Tap Water Used to Dissolve Chemicals

Tap water is no longer used to dissolve chemicals. On Wednesday, April 25th, however, the pump used to recycle gravity filter effluent to the chemical dissolution tanks experienced mechanical problems. Operations personnel reported that tap water was used for about two hours. Since tap water flows are not measured, we can only assume that flows approximated those determined during Plant Test 2000 – about three gallons per minute for each of the two chemicals, or six gpm total. Multiplying this by 120 minutes yields an estimated 720 gallons of tap water for the day, or an average flow rate of (720 gal) ÷ (410 min) = 1.8 gpm.

A.4.4 Gravity Filter Recycle (GFR)

For the remaining 290 minutes of clarifier operation on April 25th, recycled gravity filter effluent was used to dissolve the lime and ferric sulfate. This stream is also not metered so that, again, we can only assume that flows approximated those determined during Plant Test 2000 – about three gallons per minute for each of the two chemicals, or six gpm total. Multiplying this by the 290 minutes yields an estimated 1740 gallons of gravity filter recycle for the day, or an average flow rate of (1740 gal) ÷ (410 min) = 4.2 gpm.

A.4.5 Pump Seal Water

Pump seal water flows are neither metered nor monitored, supplying water on demand to lubricate the seals. We can only assume that flow approximated that determined during Plant Test 2000 – about 0.2 gallon per minute. Total flow for the day would thus be about 80 gallons.

A.4.6 Clarifier Influent (CLI)

The total of all flows into the clarifier is estimated by water balance:

$$\begin{aligned} \text{CLI} &= \text{RDF} + \text{GFR} + \text{Tap water} + \text{Seal water} \\ &= 60.4 + 4.2 + 1.8 + 0.2 = 66.6 \text{ gpm} \\ \text{CLI} &= (66.6 \text{ gpm})*(410 \text{ min}) = 27{,}300 \text{ gallons} \end{aligned}$$

A.4.7 Clarifier Sludge

(a) Tuesday, April 24th: Sludge was withdrawn from the clarifier on the morning of April 24th, prior to the start of the two-day plant test. Volume can be estimated by level changes in the clarifier and in the sludge tank.

Method E, Changes in Tank Volumes: The sludge tank has a capacity of 28,000 gallons. Its level increased from 60% to 83%, indicating that 6400 gallons of sludge were transferred.

Method E, Changes in Tank Volumes: Clarifier level was decreased before 1000 hours from 100% to 80%. Since the clarifier capacity is 28,000 gallons, this implies that about 5600 gallons of sludge were transferred to the sludge tank.

Value Selected: The change in clarifier level is selected, 5600 gallons, because lines to the sludge tank were likely due flushed by the vacuum filter operator, which inflates the number estimated for sludge tank level change.

(b) Wednesday, April 25th: No sludge was drawn on April 25th, so that this flow equaled zero. Sludge tank volume increased by about 400 gallons on this day, too, but this was likely due to flushing of the sludge lines by the vacuum filter operator.

A.4.8 Clarifier Effluent (CLE)

Clarifier effluent flows are neither metered nor monitored, and there are no surge tanks or storage vessels between the clarifier and gravity filter. Accordingly, mass balance is the only available means of estimating this flow. A balance around the clarifier (Figure A-1) leads to the following equation for clarifier effluent flow rate:

CLE + Sludge = RDF + Tap water + GFR + Pump seal water
or CLE = RDF + Tap water + GFR + Pump seal water

since sludge volume was zero on April 25th. This is simply the equation used to estimate CLI, so that CLE has the same values, 66.6 gpm and 27,300 gallons total flow.

A.5 Gravity Filter

Flows into and out of gravity filter are neither metered nor monitored, so that mass balance presents the only method of estimating flows. As shown in Figures A-1 and A-2, feed to the gravity filter equaled clarifier effluent flow of 66.6 gpm or 27,310 gallons. Gravity filter recycle has already been estimated in subsection A.4.4 above as 4.2 gpm and 1740 gallons. Gravity filter effluent is estimated by mass balance as follows:

Gravity Filter Feed = Gravity Filter Recycle + Gravity Filter Effluent
GFE = GFF – GFR = 66.6 – 4.2 = 62.4 gpm
= 27,300 – 1740 = 25,560 gal

A.6 RP Filter

Flows into and out of RP filter are neither metered nor monitored, so that mass balance presents the only method of estimating flows. As shown in Figures A-2 and A-3, feed to the RP filter (RPI) equaled gravity filter effluent flow 62.4 gpm or 25,560 gallons. Since there are no other exit streams, RP filter effluent (RPE) must equal RPI.

A.7 Tubular Ultrafilter

As seen in Figure A-4, flows into, out of, and around the TUF are complex. Three streams were sampled at the tubular ultrafilter – feed (TFI), recycle (TFR), and permeate (TFP). The TUF flow control system records flow rates for one of these three (the permeate), and at two

other piping locations. These sampling and flow measurement points are also depicted in Figure A-4. Flow and material balance calculations were complicated by several factors. First, the sampling point TFR is a different stream than the recycle stream whose flow is measured. Both are recycle streams, but they have different flows and concentrations. Second, changes in the levels of both TK-71 and TK-72 must be factored in. Second, the piping for tanks TK-71 and TK-72 has been modified since Plant Test 2000, so that TK-72 now overflows to TK-71. In fact, TK-72 overflowed for about two hours on April 25th, between noon and 14:00 hours. When overflow occurs, concentrations of impurities in waters from the two sampling points TFI and TFR will trend towards one another, so that the two streams are more similar.

A.7.1 TUF Concentrate (TFC)

There are several process flows that consist of TUF concentrate. For purposes of this report, the process stream TFC is defined to be those waters siphoned from recycled concentrate to TK-72, i.e., those waters flowing past the TUF concentrate flow meter (Figure A-2).

Method A, Field Data: Four sampling events and four meter readings (71, 71, 75, 81 gpm) were taken on the afternoon of Wednesday, 04/25/01. The average of these four readings is 74.5 gpm.

Method B, G2 Flow Chart: The G2 flow chart for TFC for 04/25 provided two pieces of information. First, the TUF operated in the morning, was shut down for nearly two hours, and then was returned to operation. Run times were 105 minutes in the morning, 335 minutes in the afternoon, after 440 minutes total for the day. Second, TUF concentrate flow rate varied from 70-90 gpm during 17 time intervals that varied in duration from 5-130 minutes. Integration of the chart yields a time-weighted average TFC flow rate of 74.0 gpm, as shown Table A-5.

Method C, Daily Summary Flow Rate: The Daily Summary reported two average flow rates for 04/25, 235 liters per minute for the morning run and 280 liters per minute for the afternoon run. These can be combined to yield a time-weighted average flow rate as follows:

AM: (235 lpm) ÷ (3.785 liters/gal) = 62.1 gpm
PM: (280 lpm) ÷ (3.785 liters/gal) = 74.0 gpm
Weighted average for the day = [(62.1)*(105) + (74.0)*(335)] ÷ [105 + 335]
= 71.2 gpm

Method D, Daily Summary Flow Totals: No data.
Method E, Changes in Tank Volumes: Not applicable.
Method F, Water Balance: Not performed.

Value Selected: Three values are estimated (74.5, 74.0, 71.2), and an average flow rate of 74 gpm is selected. This yields a total flow for the day of (74 gpm)*(440 min) = 32,560 gallons.

Table A-5
Estimating TFC for 04/25/01 From the G2 Flow Chart

Interval	Time	Min.	Avg. Flow (gpm)	Time-Weighted Flow
1	0815-0910	55	71	3,905
2	0910-0950	40	72	2,880
3	0950-1000	10	74	740
4	1140-1145	5	73	365
5	1145-1155	10	80	800
6	1155-1205	10	75	750
7	1205-1220	15	74	1,110
8	1220-1230	10	72	720
9	1230-1440	130	71	9,230
10	1440-1445	5	73	365
11	1445-1520	35	74	2,590
12	1520-1530	10	76	760
13	1530-1550	20	77	1,540
14	1550-1615	25	78	1,950
15	1615-1620	5	90	450
16	1620-1650	30	79	2,370
17	1650-1715	25	81	2,025
		440	74.0	32,550

A.7.2 TK-72 Overflow and TK-72 Underflow (TFR)

The G2 chart for TK-72 tank level shows that the tank overflowed from 1210-1410 hours, or approximately 120 minutes. Since the only source of water into TK-72 is TUF concentrate, we can use a mass balance and process knowledge to estimate both the overflow and underflow process stream volumes.

$$TFC = Overflow + TFR$$

Since neither TFR nor the overflow are metered, the equation has two unknowns and cannot be solved. Another attempted mass balance, this one on TK-71, also generates an equation with two unknowns:

$$TFI = RPE + Overflow$$

Attempts to combine these two and solve them algebraically cannot succeed, either, since there are three unknowns (TFI, TFR, Overflow) in two equations.

A.7.3 TK-71 Effluent (TFI)

Method A, Field Data: No data.
Method B, G2 Flow Chart: No data.

Method C, Daily Summary Flow Rate: No data.
Method D, Daily Summary Flow Totals: No data.

Method E, Changes in Tank Volumes: Partial data. TK-71 levels are known. However, TK-72 overflowed into TK-71 for about two hours, so that the equation for estimating TFI flows would be:

$$TFI = RPE + \Delta TK\text{-}71 + \text{Overflow from TK-72}$$

The equation has no solution since there are two unknowns, TFI and TK-72 overflow.

Method F, Water Balance: A larger mass balance envelope can be drawn, to include TK-72. In this case, there is no need to know the quantity of water that overflowed TK-72 into TK-71. The flow equation is as follows:

$$TFI + TFR = RPE + TFC + \Delta TK\text{-}71 + \Delta TK\text{-}72$$

Known values are as follows:

RPE =	25,560 gal (from Section A.6)
ΔTK-71 =	5900 - 5800 = +100 gal (from Table A-3)
ΔTK-72 =	7700 – 7800 = -100 gal (from Table A-3)
TFC = gal	(from Section A.7.2)
TFC ~ TFR	(assumption)

from which an estimated TFI flow of 25,560 gal is calculated, and from which an estimated TFI flow rate of (25,560 gal) ÷ (440 min) = 58.1 gpm.

A.7.4 TUF Permeate (TFP)

Method A, Field Data: Four sampling events and four meter readings (74, 71, 66, 67 gpm) were taken on the afternoon of Wednesday, 04/25/01. The average of these four readings is 69.5 gpm.

Method B, G2 Flow Chart: The G2 flow chart for TUF permeate for 04/25 provided two pieces of information. First, the TUF operated in the morning, was shut down for nearly two hours, and then was returned to operation. Run times were 105 minutes in the morning, 335 minutes in the afternoon, after 440 minutes total for the day. Second, TUF permeate flow rate varied from 68-77 gpm during nine time intervals that varied in duration from 20-70 minutes. Integration of the chart yields a time-weighted average TFP flow rate of 71.1 gpm, as shown Table A-6.

Table A-6
Estimating TFP for 04/25/01 From the G2 Flow Chart

Interval	Time	Min.	Avg. Flow (gpm)	Time-Weighted Flow
1	0815-0915	60	72	4,320
2	0915-1000	45	72	3,240
3	1140-1200	20	75	1,500
4	1200-1230	30	77	2,310
5	1230-1250	20	76	1,520
6	1250-1320	30	73	2,190
7	1320-1430	70	71	4,970
8	1430-1500	30	69	2,070
9	1500-1715	135	68	9,180
		440	71.1	31,300

Method C, Daily Summary Flow Rate: The Daily Summary reported two average flow rates for 04/25, 1001 liters per minute (264 gpm) for the morning run and zero liters per minute for the afternoon run. Neither of these are realistic.

Method D, Daily Summary Flow Totals: The Daily Summary reported a total TFP flow for 04/25 as 1930 liters or 510 gallons, which is not realistic.

Method E, Changes in Tank Volumes: Not applicable.
Method F, Water Balance: Not performed.

Value Selected: Two values are estimated. Since Method A relies on just four data points, the value of 71 gpm estimated via Method B is selected. This gives a total flow of (71 gpm)*(440 min) = 31,240 gallons.

A.7.5 Concentrate Purge

The RLWTF headworks consists of the three influent feed tanks, the 17K, 75K, and 100K tanks. During Plant Test 2001, these tanks were valved such that the 100K tank supplied water to the 17K tank, and the 17K tank supplied feed to the clarifier (RDF in Section A.4.1 below.) The 75K was isolated from the other two tanks, and received two water streams – new influent from LANL generators (RDI) and the daily TUF concentrate purge stream from TK-71 and TK-72. A water balance can be established as follows:

$$BI + RDI + Purge - RDF = EI$$

where:

BI = water inventory in headworks tanks at the start of the day (04/25)
EI = water inventory in headworks tanks at the start of the day (04/25)

RDI = newly generated raw influent received on 04/25
RDF = influent pumped to the clarifier
Purge = TUF concentrate purged to the 75K tank on 04/25

Beginning and ending water inventories are 64,670 and 55,260 gallons, respectively, as shown in Table A-3. RDI from the G2 Daily Summary report, was 43,600 liters, or 11,520 gallons. RDF, estimated in Section A.4.1, was 24,760 gallons. Inserting these values leads to an estimate for the purge of TUF concentrate:

$$\begin{aligned} \text{Purge} &= (\text{EI} - \text{BI}) + (\text{RDF} - \text{RDI}) \\ &= (55{,}260 - 64{,}670) + (24{,}760 - 11{,}520) \\ &= 3830 \text{ gallons} \end{aligned}$$

For the 440 minutes of TUF operation, this yields an "average" purge rate of 8.7 gpm.

A.8 Reverse Osmosis

There are three process streams (feed, concentrate, and permeate) and five tanks (TK-9 for RO feed, the north and south frac tanks for RO permeate, and the 3K tank and TK-NE for RO concentrate) associated with RO flows. The RO unit operated from 1140 to 1715 hours on 04/25/01, for a total of 335 minutes.

Water levels in TK-9 started the day at 6%, and then rose to 82% during the morning because the TUF operated for 105 minutes while the RO was idle. Water levels then fell slowly in the afternoon when both the RO and the TUF were in operation, since the RO has slightly greater capacity, and ended the day at 61%. The south frac tank started with a water level of 79%, rose to 100% shortly after the RO began operations, had its level reduced to 83% when some water was transferred to the north frac tank at about 1400 hours, and then rose again to 97% at day's end as fresh RO permeate was added. The north frac tank started the day empty, but was filled to 100% by shortly after 1600 hours. Water levels in TK-NE rose from 2.6% to 11.6% by 1500 hours; data was not obtained for level changes in the 3K tank

A.8.1 Reverse Osmosis Feed (ROF)

Method A, Field Data: Four sampling events and four meter readings (74.4, 72.6, 72.2, 71.7 gpm) were taken on the afternoon of Wednesday, 04/25/01. The average of these four readings is 72.7 gpm.

Method B, G2 Flow Chart: A flow chart is not prepared by the G2 process control system.

Method C, Daily Summary Flow Rate: This information is not reported by the G2 process control system.

Method D, Daily Summary Flow Totals: G2 reported a total RO feed flow of 366,275 liters (96,770 gal) for 04/25, which implies an average feed rate of (96,770 gal) ÷ (335 min) = 289 gpm.

Method E, Changes in Tank Volumes: See Method F.

Method F, Water Balance: The RO unit has one influent stream and two exit streams. Each of the three were sampled, and two of the three are equipped with flow meters. Figure 5-3 shows the arrangement, from which we can create a mass balance:

$$TFP + \Delta TK\text{-}9 = Feed$$

TFP was estimated in Section A.7.3 as 31,240 gallons. TK-9 water level increased during the day from 6% to 61%, for a net inventory gain of 55% or 5500 gallons. Hence, feed volume is estimated to be:

$$ROF = 31{,}240 - 5500 = 25{,}740 \text{ gal}$$

and average feed flow rate is estimated to (25,740 gal) ÷ (335 min) = 76.8 gpm

Value Selected: Three values are estimated, but Method D yields an obviously incorrect number. Since Method A relies on just four data points, the values of 76.8 gpm and 25,740 total gallons estimated via Method F are selected.

A.8.2 Reverse Osmosis Concentrate (ROC)

Method A, Field Data: Four sampling events and four meter readings (8.6, 9.0, 9.0, 9.1 gpm) were taken on the afternoon of Wednesday, 04/25/01. The average of these four readings is 8.9 gpm.

Method B, G2 Flow Chart: A flow chart is not prepared by the G2 process control system.

Method C, Daily Summary Flow Rate: Average ROC flow rate was reported at 39.79 liters per minute (10.5 gpm) for the morning flush, and at 34.16 lpm (9.0 gpm) for afternoon operations.

Method D, Daily Summary Flow Totals: This information is not reported by the G2 process control system.

Method E, Changes in Tank Volumes: Water levels in TK-NE rose from 2.6 to 11.6% by 1500 hours, but then failed to increase even though the RO unit was in operation for another two hours. It is likely that the ROC was filling the 3K tank, but that no water transfer from the 3K to TK-NE occurred. Indeed, the TK-NE level increase from 2.6% to 11.6% occurred within minutes shortly before 1500 hours, and indicates a batch transfer from the 3K to TK-NE.

Using several assumptions, ROC can be estimated as follows. The RO did not operate on 04/24, and water levels in TK-NE did not change on 04/24. Therefore, we can assume that the increase at 1500 hours on 04/25 contained all of the ROC generated up to that point (i.e., from 1140 to about 1440) on 04/25. Thus:

ROC for 180 minutes = ΔTK-NE = (+9%)*(180 gal per percent increase) = 1620 gal
ROC flow rate = (1620 gal) ÷ (180 min) = 9 gpm

Method F, Water Balance: Not performed.

Value Selected: Three values are derived – 8.9, 9.0, and 9.0 gpm. An ROC flow rate of 9.0 gpm is selected, which yields a total flow of (9 gpm)*(335 min) = 3015 gallons.

A.8.3 Reverse Osmosis Permeate (ROP)

Method A, Field Data: Four sampling events and four meter readings (67.5, 65.5, 65.5, 63.5 gpm) were taken on the afternoon of Wednesday, 04/25/01. The average of these four readings is 65.5 gpm.

Method B, G2 Flow Chart: The G2 flow chart for RO permeate for 04/25 provided two pieces of information. First, the RO was flushed in the morning for about 50-60 minutes, and generated about 250 gallons of permeate. (TK-9 level rose from 79% to 81.5%.). The unit was then placed into operation from 1140 to 1715 hours (335 minutes). Second, RO permeate flow rate decreased from 71-64 gpm during seven time intervals that varied in duration from 15-135 minutes. Integration of the chart yields a time-weighted average ROP flow rate of 66.0 gpm, as shown Table A-7.

Table A-7
Estimating ROP for 04/25/01 From the G2 Flow Chart

Interval	Time	Min.	Avg. Flow (gpm)	Time-Weighted Flow
1	1140-1200	20	71	1,420
2	1200-1225	25	69	1,725
3	1225-1250	25	67	1,675
4	1250-1505	135	66	8,910
5	1505-1520	15	65	975
6	1520-1600	40	65.5	2,620
7	1600-1715	75	64	4,800
		335	66.0	22,125

Method C, Daily Summary Flow Rate: This information is not reported by the G2 process control system.

Method D, Daily Summary Flow Totals: G2 reported a total RO feed flow of 321,649 liters (84,980 gal) for 04/25, which implies an average feed rate of (84,980 gal) ÷ (335 min) = 254 gpm.

Method E, Changes in Tank Volumes: The north frac tank was filled completely during the day, and water levels in the south frac tank rose from 79% to 97% Table A-1). These amount to volumes increases of 19,400 and 2790 gallons, respectively, for a total volume increase of 22,190 gallons. In turn, this leads to an estimated average ROP flow rate of 66.2 gpm (22,190 gal ÷ 335 min).

Method F, Water Balance: Not performed.

Value Selected: Four values are estimated, but Method D yields an obviously incorrect number. This leaves three close estimates (65.5, 66.0, and 66.2 gpm). Since Method A relies on just four data points, the values of 66.0 gpm and 22,100 total gallons estimated via Method B are selected.

A.9 Flush Solutions

Flush solutions are prepared in the CIP system, and this volume can be estimated by changes in the level of TK-74. G2 flow charts indicate that TK-74 was used twice on 04/24 (at 1000 and 1300 hours), and thrice on 04/25 (at 0830, 1000, and 1700 hours). Level and volume changes are estimated in Table A-8 below:

Table A-8
Membrane Flush Solution Volumes, 04/24/01 and 04/25/01

Date	Time	Unit [A] Flushed	Level Change	Volume Used [B] (gal)
04/24	1000	TUF?	78% → 45%	300
04/24	1300	TUF?	65% → 15%	450
04/25	0830	RO	74% → 17%	510
04/25	1000	TUF?	95% → 16%	710
04/25	1700	TUF?	98% → 56%	380

A: From G2 flow charts.
B: Tank volume of 900 gallons = 100%.

Thus total flush volumes were 750 gallons on 04/24 and 1600 gallons on 04/25. However, because it is assumed that TUF permeate and/or RO permeate were used as flush water, flush water becomes an internal recycle stream, and the volume of flush solution will be set equal to zero.

A.10 Unit Operations Flow Summary

Table A-9 summarizes the results from Sections A-4 through A-8 above, indicating flow rates estimated by the various methods, and the selected flow rate for each process stream. Stream flow rates estimated for each unit operation are then depicted in Figures 5-1, 5-2, and 5-3. Total flows for Wednesday, 04/25/01, are illustrated in Figure 5-4. Different illustrations are needed because the various unit operations were operated at different times and for differing durations. The clarifier and its two traditional filtration units operated continuously from 1025-1550, for a total of 410 minutes; the TUF operated some in the morning and some in the afternoon, for a total of 440 minutes; and the RO operated only in the afternoon, for just 335 minutes.

As can be seen, especially in Figure A-4, flows do not balance around the TUF. Total flow into the TUF system, RP effluent, was 25,560 gallons. Total flow out of the system, the daily purge plus TUF permeate, was 35,070 gallons.

Table A-9
Summary of Unit Operation Flow Estimates

	Process Stream	Symbol	Flow Methods Used	Selected Flow Rate (gpm)	Selected Total Flow (gal)	Selected Flow Rate (lph)	Selected Total Flow (liters)
Clarifier:							
	Influent	RDF	ABCD*E	60.4	24,760	13,700	93,700
	Tap water	---	G	1.8	720	400	2,700
	Seal water	---	G	0.2	80	45	300
	Gravity filter recycle	GFR	G	4.2	1,740	1,000	6,600
	Clarifier influent	CLI	F	66.6	27,300	15,100	103,300
	Sludge	---	G	0.0	0	0	0
	Clarifier effluent	CLE	F	66.6	27,300	15,100	103,300
Gravity Filter:							
	Gravity filter influent	CLE	F	66.6	27,300	15,100	103,300
	Gravity filter recycle	GFR	F	4.2	1,740	1,000	6,600
	Gravity filter effluent	RPI	F	62.4	25,560	14,200	96,700
RP Filter:							
	RP influent	RPI	F	62.4	25,560	15,100	103,300
	RP effluent	RPE	F	62.4	25,560	15,100	103,300
TUF:							
	TK-71 influent	TFI	---	58	25,560	13,200	96,700
	TK-72 recycle	TFR	---	--	--	--	--
	Concentrate	TFC	AB*C	74	32,560	16,800	123,200
	Purge to 75K tank	Purge	F	8.7	3,830	2,000	14,500
	Permeate	TFP	AB*CD	71	31,240	16,100	118,200
RO:							
	RO feed	ROF	A, D, F*	76.8	25,740	17,400	97,400
	RO concentrate	ROC	A, C*, E	9.0	3,015	2,000	11,400
	RO permeate	ROP	A, B*, D, E	66.0	22,100	15,000	83,600

* Method used for selected flow rate

Figure A-1
Average Flow Rates for the Clarifier, Gravity Filter, and RP Filter on 04/25/01

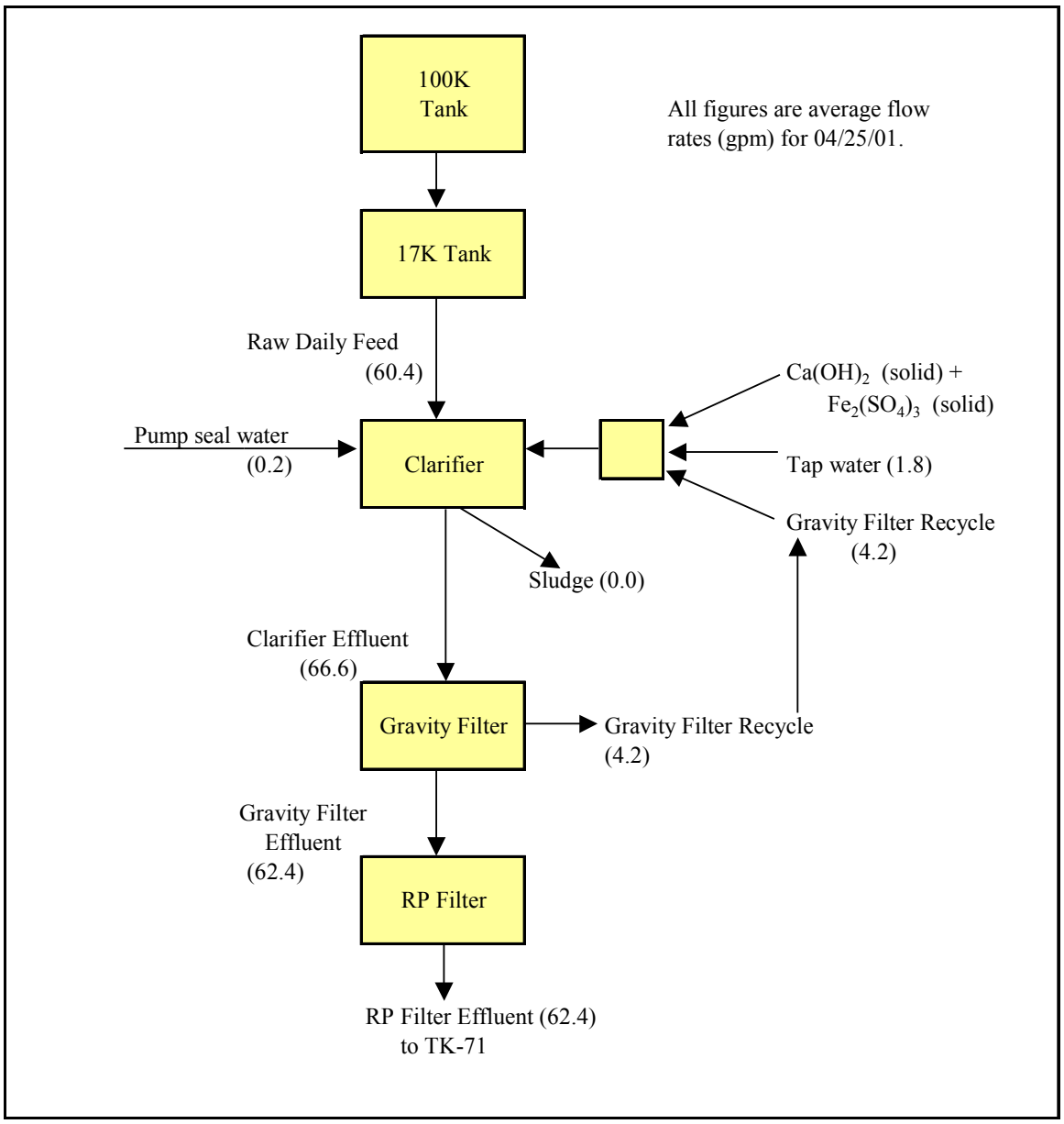

Figure A-2

Average Flow Rates for the Tubular Ultrafilter on 04/25/01

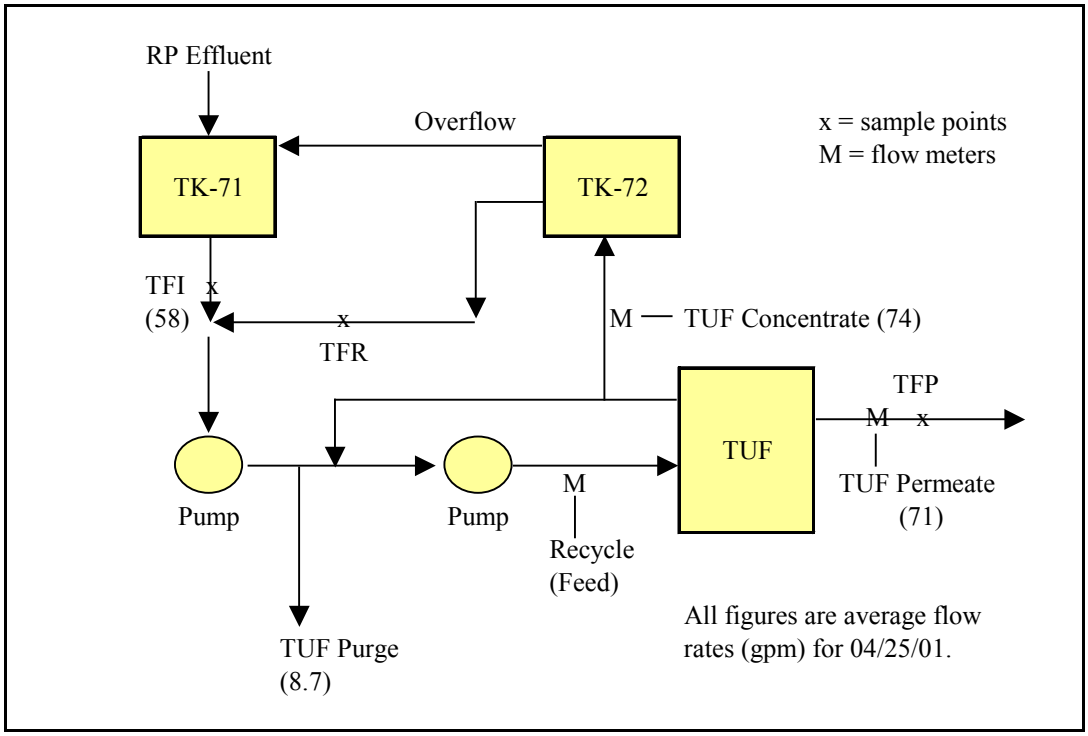

Figure A-3

Average Flow Rates for Reverse Osmosis on 04/25/01

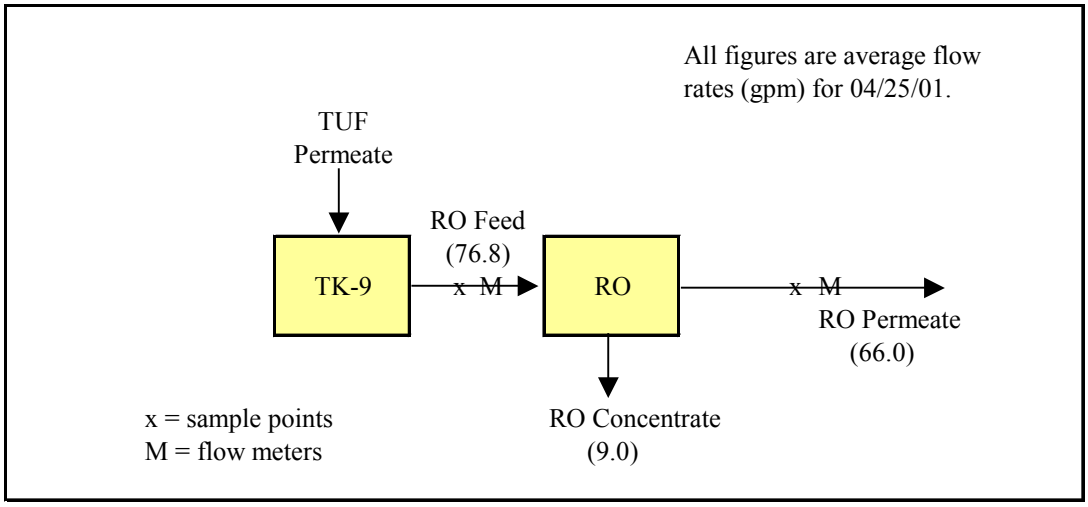

Figure A-4

Flows (Total) on 04/25/01

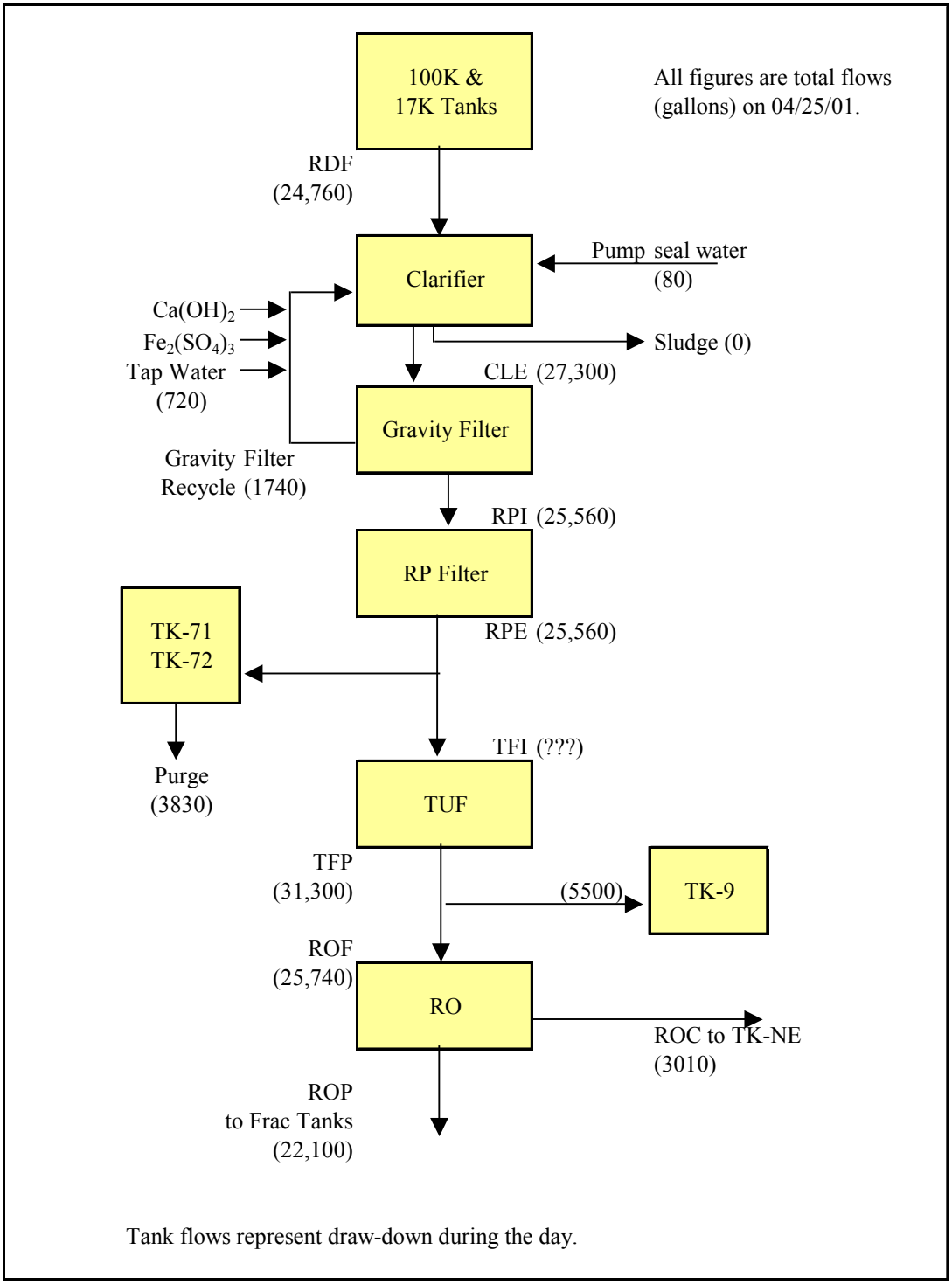

A.11 One-Day Water Balance

Because flows do not balance when examining individual unit operations, a water balance was performed on the entire RLWTF for Wednesday, 04/25/01. The below equation is illustrated in Figure A-5:

BI + RDI + Flush solns + Tap water + Seal water = EI + Sludge + ROC + Effluent

where:

BI = water inventory in headworks tanks at the start of the day (04/25)
EI = water inventory in headworks tanks at the start of the day (04/25)
RDI = newly generated raw influent received on 04/25
Cleaning solutions = Tap water used in the daily flush of the TUF and RO membranes
Tap water = water used to dissolve chemicals
Seal water = pump seal water
Sludge = Clarifier sludge sent to the sludge tank
ROC = RO concentrate sent to the tank farm
Effluent = waters discharged Mortandad Canyon

The CIP system is included as part of the MTP for this discussion. This equation therefore includes all RLWTF equipment *except*:

- Clarifier #1, which was bypassed during the two-day Plant Test 2001
- the North and South effluent tanks, whose volumes did not change
- the tank farm (Only one tank was used, TK-NE. It's volume change is used to estimate ROC volume, however.)
- the sludge tank (It's volume change is used to estimate clarifier sludge, however.)
- Room 60, which was not used during these two days, and associated tanks
- Secondary stream unit operations (EDR and evaporator), which were not used
- TK-08 and TK-73, which were not in use

This approach eliminates many internally recycled streams, and thus reduces uncertainty and the chances for error. For example, since TUF purge waters are sent to TK-75, there is no need to estimate this process stream; it is accounted for in the change in headworks water inventory. This approach also relies only on total flows, not flow rates, thus avoiding differences introduced by differing operating times for the various unit operations.

Beginning and ending water inventories are shown in Table A-2. RDI, tap water, seal water, and ROC were estimated in Sections A.7.6, A.4.3, A.4.5, and A.8.2, respectively. Data for effluent comes from the G2 Daily Summary reports; no discharges were made on 04/25. Operators reported no clarifier sludge withdrawal on 04/25.

All values are thus known, and it remains to see if the equation balances:

$$128{,}070 + 11{,}520 + 0 + 720 + 80 \quad ?=? \quad 146{,}360 + 0 + 0$$
$$140{,}390 \quad \neq \quad 146{,}630$$

As can be seen, an estimated 6200 gallons more existed at the end of the day than can be accounted for. This is smaller number than, but the same results as obtained when flows were estimated for individual unit operations. As explained in Section A.9, flows out of the TUF exceeded flows into the TUF by an estimated 9500 gallons on 04/25/01.

A.12 Two-Day Water Balance

In a final attempt to balance water flows for Plant Test 2001, a water balance was performed for *both* days of the test, 04/24/01 and 04/25/01. The same equation can be used:

BI + RDI + Flush solns + Tap water + Seal water = EI + Sludge + ROC + Effluent

Two-day volumes are estimated in the same locations as cited for the one-day totals. All values are thus known, and it remains to see if the equation balances:

$$140{,}800 + 24{,}570 + 0 + 720 + 160 \quad ?=? \quad 146{,}360 + 5{,}600 + 3{,}015 + 19{,}400$$
$$166{,}250 \quad \neq \quad 174{,}380$$

As can be seen, an estimated 8100 gallons more existed at the end of the two days than can be accounted for. This number lies between the discrepancies estimated for the one-day water balance (6200 gallons) and the unit operations water balances (9500 gallons). It therefore confirms the mystery.

Figure A-5

One-Day Overall Water Balance (04/25/01)

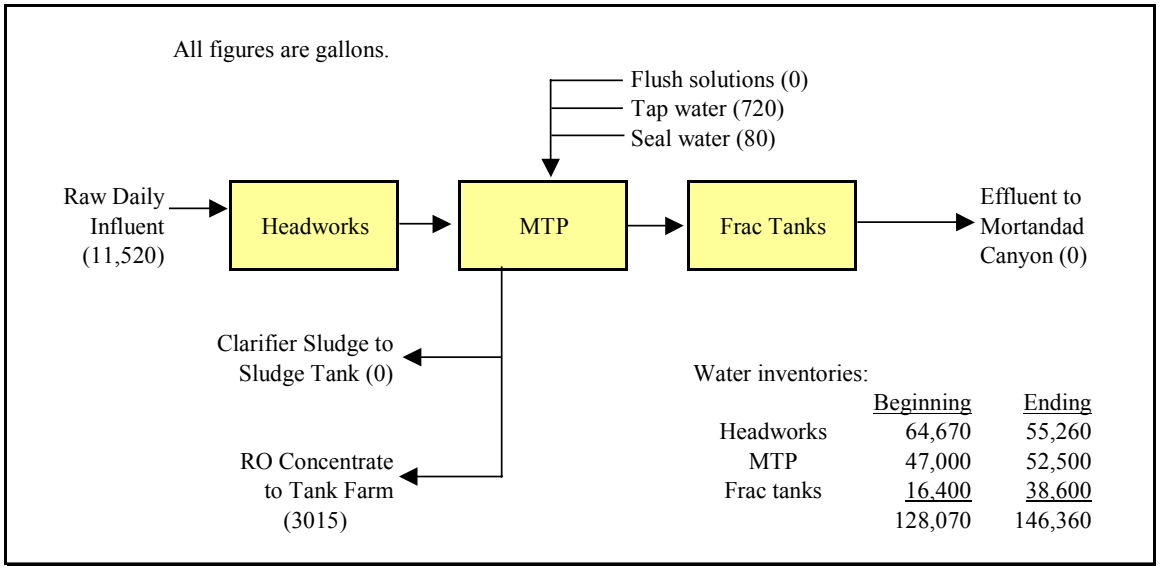
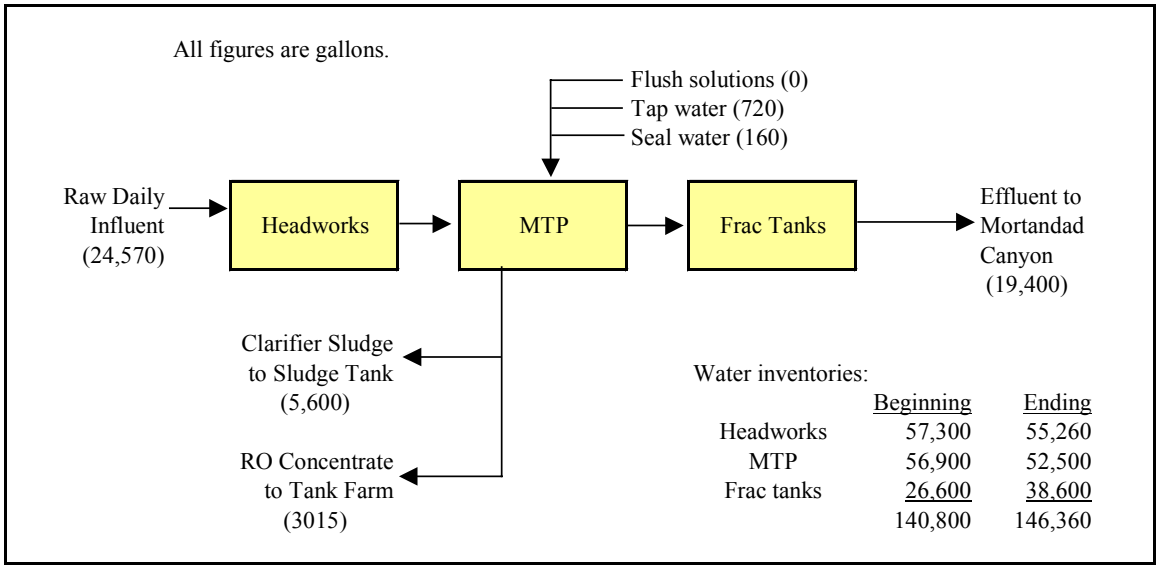
Figure A-6
Two-Day Overall Water Balance (04/24 & 04/25)